Manila and wire rope blocks	01
Rope pulleys	02
Gin blocks	03
Sliding door pulleys	04
Guide sheaves, trolley wheels	05
Rope grips	06
Rope fittings	07
Manually operated jacks and winches	08
Flag hoist assemblies and pulleys	09
Hooks and oval eyes	10
Tackle blocks	11
Manually operated chain wheels and trolleys	12

Manila rope blocks

Wire rope blocks

Galvanized blocks

Span blocks

Cargo and lead blocks

Snatch blocks

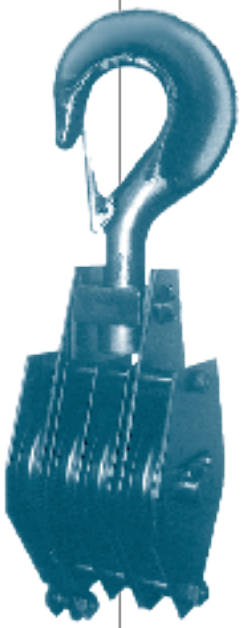

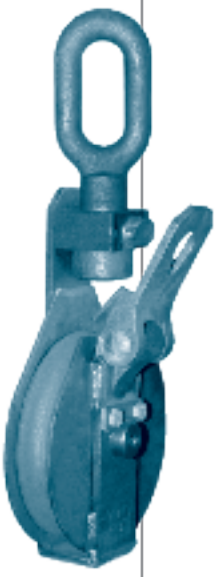

Bottom hook blocks for cranes – see special catalogue

Product								Page
Manila rope block No. 11 single sheave								1.02
Manila rope block No. 12 two sheaves								1.02
Manila rope block No. 13 three sheaves								1.02
Manila rope block No. 14 four sheaves								1.02
Manila rope block No. 15 Snatch block, single sheave								1.02
Manila rope block No. 1152 Snatch block, two sheaves								1.02
Manila rope block No. 11 ö single sheave								1.03
Manila rope block No. 12 ö two sheaves								1.03
Manila rope block No. 13 ö three sheaves								1.03
Manila rope block No. 14 ö four sheaves								1.03
Manila rope block No. 15 ö Snatch block, single sheave								1.03
Manila rope block No. 1152 ö Snatch block, two sheaves								1.03
Wire rope block No. 31 single sheave								1.08
Wire rope block No. 32 two sheaves								1.08
Wire rope block No. 33 three sheaves								1.08
Wire rope block No. 34 four sheaves								1.08

Product								Page
Wire rope block No. 36 Snatch block, single sheave								1.08
Wire rope block No. 362 Snatch block, two sheaves								1.08
Wire rope block No. 41 single sheave								1.09
Wire rope block No. 42 two sheaves								1.09
Wire rope block No. 43 three sheaves								1.09
Wire rope block No. 44 four sheaves								1.09
Wire rope block No. 46 Snatch block, single sheave								1.09
Wire rope block No. 462 Snatch block, two sheaves								1.09
Rope pulley No. 60 single sheave								1.12
Rope pulley No. 62 single sheave								1.12
Rope pulley No. 70 single sheave								1.12
Rope pulley No. 74 single sheave								1.12
Rope pulley No. 84 single sheave								1.13
Rope pulley No. 86 single sheave								1.13
Stainless steel manila rope block No. 91 single sheave								1.14
Stainless steel manila rope block No. 92 two sheaves								1.14

Product								Page
Stainless steel manila rope block No. 95 Snatch block, single sheave								1.14
Block rope pulley No. 411 single sheave								1.16
Block rope pulley No. 413 single sheave								1.16
Block rope pulley No. 414 two sheaves								1.16
Span block No. 601 former DIN 82221								1.18
Upper span block No. 603 former DIN 82223								1.22
Lower span block No. 605 former DIN 82222								1.23
Cargo and lead block No. 611 former DIN 82226								1.26
Snatch block No. 617 former DIN 82220								1.30

Manila rope blocks

with safety catch

Our manila rope blocks are of excellent quality, manufactured according to the current state-of-the-art. The integrated manila rope pulleys no. 16 h have neatly machined grooves and anti-rust coating. All manila rope blocks are supplied with lower becket and are coated greyish blue. However, they can also be delivered with any other colour.

The maximum admissible load per manila rope block at the hook or swivel oval eye is indicated in the table “Manila rope blocks” according to classification 1 Bm, DIN 15020, sheet 1, whereas the maximum admissible load of the tackle blocks can be seen in the table “Loads of manila rope blocks and manila tackle blocks”. In each case a safety factor of 4 is calculated.

The following types can be supplied:
- with lifting hook (DIN 688 / DIN 15401) and safety catch
- with swivel oval eye according to DIN 82006

On request the manila rope blocks can also be delivered as follows:
- with solid cast iron pulley no. 16 d for wire ropes (groove not machined)
- with manila rope pulley no. 16 h or wire rope pulley no. 16 d with integrated red bronze bush
- with manila rope pulley no. 16 h or wire rope pulley no. 16 d with integrated roller bearing
- with brass pulley for manila ropes
- case neatly galvanized, rope pulleys with anti-rust coating

Manila rope blocks

Please specify in order:
lt = coated
vz = galvanized

No. 11 **No. 12** **No. 13** **No. 14** **No. 15** **No. 1152**

No. 11 - 1152 Manila rope blocks

with lifting hook No. 511 former DIN 688 or No. 535 acc. to DIN 15401 with safety catch and becket.
With manila rope pulleys no. 16 h made of cast iron; if required also with wire rope pulley No. 16 d and roller bearing.
All dimensions in mm.

Outside diameter		**60**	**75**	**90**	**100**	**120**	**130**	**150**	**175**	**200**	**230**
Groove base diameter		50	65	78	84	102	110	128	149	172	194
for manila rope diameter up to	(sheave 16 h)	10	10	13	16	19	22	26	32	38	44
for wire rope diameter up to	(sheave 16 d)	6	7	8	9	10	12	14	16	18	22
Case width		78	85	112	112	130	150	165	197	220	255
No. 11	adm. load at hook kg	75	100	150	250	500	500	1000	1500	2000	3000
with	hook opening width	12	12	20	19	24	24	32	33	37	40
1 sheave	axial length	35	41	47	50	58	63	72	80	90	105
	overall length with hook	220	250	295	320	380	405	465	510	585	670
	weight in kg about	0,50	1,00	1,50	2,00	3,50	4,00	5,50	8,50	12,50	19,00
No. 12	adm. load at hook kg	100	150	250	500	750	1000	1500	2000	3000	5000
with	hook opening width	12	20	19	24	24	32	33	37	40	46
2 sheaves	axial length	56	62	71	75	90	100	112	130	150	175
	overall length with hook	250	280	345	385	450	490	540	590	690	800
	weight in kg about	1,00	1,50	2,50	3,00	5,00	7,00	9,50	14,50	21,50	29,50
No. 13	adm. load at hook kg	150	250	500	750	1000	1500	2000	3000	5000	6000
with	hook opening width	20	19	24	32	32	33	37	40	46	48
3 sheaves	axial length	78	84	94	106	130	139	153	185	209	246
	overall length with hook	255	300	385	415	465	510	540	645	730	735
	weight in kg about	1,50	2,00	3,50	4,50	7,00	9,50	13,50	20,00	30,50	42,00
No. 14	adm. load at hook kg	–	–	–	1000	1500	2000	3000	5000	6000	7500
with	hook opening width	–	–	–	32	33	37	40	46	48	48
4 sheaves	axial length	–	–	–	138	159	174	195	235	276	315
	overall length with hook	–	–	–	425	480	505	560	575	740	855
	weight in kg about	–	–	–	5,50	9,00	12,50	18,00	27,00	37,50	56,00
No. 15	adm. load at hook kg	–	100	150	250	500	500	1000	1500	2000	3000
Snatch block	hook opening width	–	20	20	19	24	24	32	33	37	40
with	axial length	–	41	47	50	58	63	72	80	90	105
1 sheave	overall length with hook	–	250	295	315	390	405	455	495	580	685
	weight in kg about	–	1,00	1,50	2,00	3,50	4,00	6,00	8,50	13,00	19,50
No. 1152	adm. load at hook kg	–	–	–	500	750	1000	1500	2000	3000	5000
Snatch block	hook opening width	–	–	–	24	32	32	33	37	40	46
with	axial length	–	–	–	75	90	100	112	130	150	175
2 sheaves	overall length with hook	–	–	–	380	430	430	545	560	600	760
	weight in kg about	–	–	–	3,50	4,80	7,50	10,50	15,00	22,50	29,50

Manila rope blocks

Please specify in order:
lt = coated
vz = galvanized

No. 11 ö

No. 12 ö

No. 13 ö

No. 14 ö

No. 15 ö

No. 1152 ö

No. 11 ö - 1152 ö Manila rope blocks

with swivel oval eye No. 534 acc. to DIN 82006 and becket. With manila rope pulleys no. 16 h made of cast iron; if required also with wire rope pulley No. 16 d and roller bearing.
All dimensions in mm.

Outside diameter		**60**	**75**	**90**	**100**	**120**	**130**	**150**	**175**	**200**	**230**
Groove base diameter		50	65	78	84	102	110	128	149	172	194
for manila rope diameter up to (sheave 16 h)		10	10	13	16	19	22	26	32	38	44
for wire rope diameter up to (sheave 16 d)		6	7	8	9	10	12	14	16	18	22
Case width		78	85	112	112	130	150	165	197	220	255
No. 11 ö	adm. load at oval eye kg	75	100	150	250	500	500	1000	1500	2000	3000
with	clear oval eye dimens.	19 x 35	19 x 35	19 x 35	28 x 48	29 x 50	29 x 50	34 x 60	26 x 58	26 x 58	32 x 72
1 sheave	axial length	35	41	47	50	58	63	72	80	90	105
	overall length with oval eye	200	230	270	300	350	370	425	480	550	615
	weight in kg about	0,50	1,00	1,50	1,50	3,00	4,00	5,00	7,50	11,50	16,00
No. 12 ö	adm. load at oval eye kg	100	150	250	500	750	1000	1500	2000	3000	5000
with	clear oval eye dimens.	19 x 35	19 x 35	28 x 48	29 x 50	34 x 60	34 x 60	26 x 58	26 x 58	32 x 72	40 x 94
2 sheaves	axial length	56	62	71	75	90	100	112	130	150	175
	overall length with oval eye	230	255	330	345	395	450	495	545	635	730
	weight in kg about	1,00	1,50	2,50	3,00	4,50	6,50	8,50	13,00	19,50	28,00
No. 13 ö	adm. load at oval eye kg	150	250	500	750	1000	1500	2000	3000	5000	6000
with	clear oval eye dimens.	19 x 35	28 x 48	29 x 50	34 x 60	34 x 60	26 x 58	26 x 58	32 x 72	40 x 94	45 x 108
3 sheaves	axial length	78	84	94	106	130	139	153	185	209	246
	overall length with oval eye	225	280	335	375	420	465	520	570	660	770
	weight in kg about	1,50	2,00	3,00	4,00	6,50	8,50	12,50	18,00	27,00	40,00
No. 14 ö	adm. load at oval eye kg	–	–	–	1000	1500	2000	3000	5000	6000	7500
with	clear oval eye dimens.	–	–	–	34 x 60	26 x 58	26 x 58	32 x 72	40 x 94	45 x 108	49 x 115
4 sheaves	axial length	–	–	–	138	159	174	195	235	276	315
	overall length with oval eye	–	–	–	370	425	460	530	590	710	795
	weight in kg about	–	–	–	5,30	9,00	10,50	16,50	25,00	37,00	50,00
No. 15 ö	adm. load at oval eye kg	–	100	150	250	500	500	1000	1500	2000	3000
Snatch	clear oval eye dimens.	–	19 x 35	19 x 35	28 x 48	29 x 50	29 x 50	34 x 60	26 x 58	26 x 58	32 x 72
block	axial length	–	41	47	50	58	63	72	80	90	105
with	overall length with oval eye	–	230	270	300	350	370	425	480	550	615
1 sheave	weight in kg about	–	1,00	1,50	1,50	3,00	3,50	5,50	8,00	11,50	16,50
No. 1152 ö	adm. load at oval eye kg	–	–	–	500	750	1000	1500	2000	3000	5000
Snatch	clear oval eye dimens.	–	–	–	29 x 50	34 x 60	34 x 60	26 x 58	26 x 58	32 x 72	40 x 94
block	axial length	–	–	–	75	90	100	112	130	150	175
with	overall length with oval eye	–	–	–	345	395	450	495	545	635	730
2 sheaves	weight in kg about	–	–	–	3,20	4,50	6,50	9,50	13,50	21,00	25,00

Load table of manila rope blocks and manila tackle blocks.

Pull downwards.

Outside diameter			**mm**	**60**	**75**	**90**	**100**	**120**	**130**	**150**	**175**	**200**	**230**
Block with 1 sheave		rope pull	kg	40	50	75	125	200	250	500	750	1000	1500
		adm. load	kg	40	50	75	125	200	250	500	750	1000	1500
Tackle block	1 sheave above	rope pull	kg	25	35	50	85	150	175	350	525	700	1000
	1 sheave below	adm. load	kg	50	65	100	165	250	325	650	975	1300	2000
Tackle block	2 sheaves above	rope pull	kg	30	40	55	90	150	185	370	550	735	1100
	1 sheave below	adm. load	kg	75	100	150	250	400	500	1000	1500	2000	3000
Tackle block	2 sheaves above	rope pull	kg	25	35	55	110	165	220	325	435	650	1100
	2 sheaves below	adm. load	kg	80	125	200	400	600	800	1200	1600	2400	3900
Tackle block	3 sheaves above	rope pull	kg	25	35	60	120	200	230	350	465	700	1150
	2 sheaves below	adm. load	kg	100	150	250	500	750	1000	1500	2000	3000	5000
Tackle block	3 sheaves above	rope pull	kg	25	40	85	125	165	250	330	500	800	1000
	3 sheaves below	adm. load	kg	125	210	425	625	850	1250	1700	2500	4200	5000
Tackle block	4 sheaves above	rope pull	kg	–	–	–	130	220	300	340	515	850	1030
	3 sheaves below	adm. load	kg	–	–	–	750	1000	1500	2000	3000	5000	6000
Tackle block	4 sheaves above	rope pull	kg	–	–	–	135	200	270	400	665	800	1000
	4 sheaves below	adm. load	kg	–	–	–	850	1300	1800	2600	4300	5200	6500

Spare pulleys

for manila rope blocks No. 11 (ö) – 1152 (ö)

No. 16 d Wire rope pulleys made of cast iron

Groove not machined, hub bored, fitting our manila rope blocks. Also with red bronze bush (design “R”) or roller bearing (design “W”).
All dimensions in mm.

Outside diameter Groove base diameter	**60** 48	**75** 61	**90** 72	**100** 80	**120** 98	**130** 104	**150** 120	**175** 141	**200** 162	**230** 184
Groove radius	3	3,5	4,5	5	5,5	6,5	7,5	8,5	9,5	11,5
Groove depth	6	7	9	10	11	13	15	17	19	23
Rim width	15	15	18	20	28	29	32	39	48	57
Bore for axle	11	12	14	14	19	22	25	27	30	35
Hub length	16	16	20	24	30	32	35	43	52	61
Hub diameter	32	33	36	40	46	52	54	60	63	71
Rope diameter max.	6	7	8	9	10	12	14	16	18	22
Loading capacity in kg	75	100	150	250	500	500	1000	1500	2000	3000
Weight in kg about	0,18	0,26	0,40	0,57	0,95	1,25	1,60	2,50	4,10	5,80

No. 16 h Manila rope pulleys made of cast iron

Groove machined, hub bored, anti-rust coated, fitting our manila rope blocks. Also with red bronze bush (design “R”) or roller bearing (design “W”).
All dimensions in mm.

Outside diameter Groove base diameter	**60** 50	**75** 65	**90** 78	**100** 84	**120** 102	**130** 110	**150** 128	**175** 149	**200** 172	**230** 194
Groove radius	5,5	5,5	7	8,5	10	12	14	17,5	20,5	23,5
Groove depth	5	5	6	8	9	10	11	13	14	18
Rim width	15	15	19	22	27	30	33	41	46	55
Bore for axle	11	12	14	14	19	22	25	27	30	35
Hub length	16	16	20	24	30	32	35	43	52	61
Hub diameter	21	32	35	35	35	39	41	51	57	70
Rope diameter max.	10	10	13	16	19	22	26	32	38	44
Loading capacity in kg	75	100	150	250	500	500	1000	1500	2000	3000
Weight in kg about	0,15	0,22	0,32	0,45	0,80	1,00	1,40	2,20	3,30	4,70

Wire rope blocks

To meet all requirements all parts of our wire rope blocks are manufactured particularly strong and solid, according to the current state-of-the-art. The rope pulleys made of **polyamide or steel** are provided with plain bearings and are running on strong steel bolts. Against a surcharge the rope pulleys can also be delivered with roller bearings or precision ball bearings.

The following types can be supplied:
- with lifting hook according to DIN 15401 (A St 52/StE 355) and safety catch
- with swivel oval eye according to DIN 82006 (R St 37-2)

Except for the snatch blocks all wire rope blocks are supplied with a lower becket. The blocks are coated greyish blue. However, they can also be delivered with an other colour.
The maximum admissible load per wire rope block at the suspension is indicated for each size according to classification 1 Bm, DIN 15020, sheet 1, whereas the maximum admissible load of the tackle blocks can be taken from the load tables which are considering a safety factor of 4. We also deliver blocks for higher loads, with lower loading capacities or with more than four sheaves as well as cargo blocks for maritime and river shipping. We would be pleased to receive your request for quotation.

Wire rope blocks

Please specify in order:

GG/R =
with pulley(s)
made of polyamide with
plain bearing

ST/R =
with steel pulley(s)
with plain bearing

ST/W =
with steel pulley(s)
with roller bearing

ST/K =
with steel pulley(s)
with ball bearing

No. 31

No. 32

No. 33

No. 34

No. 36

No. 362

No. 31 - 362 Wire rope blocks

with lifting hook acc. to DIN 15401 with safety catch. For further hook dimensions please refer to shank hooks No. 535 b, on page 10.10. With wire rope pulleys No. 37 size 100 - 150 mm made of polyamide or size 100 - 480 mm made of steel with plain bearing. All dimensions in mm.

Outside diameter		**100**	**125**	**150**	**175**	**200**	**225**	**250**	**310**	**350**	**400**	**480**
Groove base diameter		80	105	125	145	170	185	210	260	300	340	410
for wire rope diameter up to		7	9	11	12	15	16	18	23	26	30	32
Case width		130	150	165	210	210	265	265	325	365	420	510
No. 31	adm. load at hook kg	500	1000	2000	3000	3000	5000	5000	8000	10000	12500	16000
with	hook opening width	25	30	33	41	41	45	45	52	59	67	69
1 sheave	axial length	55	55	65	82	82	90	90	110	115	130	160
	overall length with hook	385	430	500	640	640	740	740	890	1020	1135	1300
	weight in kg about	3,50	4,50	7,50	15,00	15,50	24,00	25,00	45,00	58,00	102,00	138,00
No. 32	adm. load at hook kg	1000	1600	3000	5000	5000	8000	8000	12500	16000	20000	25000
with	hook opening width	30	33	41	45	45	52	52	67	69	76	84
2 sheaves	axial length	81	86	113	130	130	150	150	180	195	225	250
	overall length with hook	410	440	525	680	680	785	785	940	1080	1220	1380
	weight in kg about	5,00	7,00	12,00	23,00	24,00	38,50	40,50	75,00	110,00	189,00	230,00
No. 33	adm. load at hook kg	1600	2000	5000	8000	8000	10000	12500	20000	25000	32000	40000
with	hook opening width	33	33	45	52	52	59	67	76	84	97	110
3 sheaves	axial length	106	115	135	177	177	210	210	255	260	310	320
	overall length with hook	420	465	595	760	760	900	930	1020	1230	1310	1480
	weight in kg about	7,00	9,50	21,00	28,00	29,50	64,00	70,50	110,00	173,00	293,00	367,00
No. 34	adm. load at hook kg	2000	3000	5000	8000	10000	12500	16000	25000	32000	40000	50000
with	hook opening width	33	41	45	52	59	67	69	84	97	110	132
4 sheaves	axial length	145	150	180	255	255	280	280	340	350	410	450
	overall length with hook	405	480	590	690	720	870	920	1020	1100	1360	1550
	weight in kg about	8,00	13,50	24,50	45,00	50,50	81,00	90,00	183,00	219,00	402,00	490,00
No. 36	adm. load at hook kg	500	1000	2000	3000	3000	5000	5000	8000	10000	12500	16000
Snatch	hook opening width	25	30	33	41	41	45	45	52	59	67	69
block with	axial length	55	61	73	90	90	105	105	120	125	160	190
1 sheave	overall length with hook	350	390	435	580	580	700	700	810	850	1000	1150
	weight in kg about	3,50	4,50	7,50	15,00	15,50	24,00	25,00	41,00	55,00	120,00	138,00
No. 362	adm. load at hook kg	1000	1600	3000	5000	5000	8000	8000	12500	16000	20000	25000
Snatch	hook opening width	30	33	41	45	45	52	52	67	69	76	84
block with	axial length	84	90	114	145	145	170	170	200	210	255	280
2 sheaves	overall length with hook	480	510	610	730	765	900	900	1140	1150	1370	1550
	weight in kg about	6,00	7,50	14,00	23,00	27,50	45,00	46,00	75,00	81,00	185,00	225,00

Wire rope blocks

Please specify in order:

GG/R =
with pulley(s)
made of polyamide with
plain bearing

ST/R =
with steel pulley(s)
with plain bearing

ST/W =
with steel pulley(s)
with roller bearing

ST/K =
with steel pulley(s)
with ball bearing

No. 41 **No. 42** **No. 43** **No. 44** **No. 46** **No. 462**

No. 41 - 462 Wire rope blocks

with swivel oval eye acc. to DIN 82006. For further oval eye dimensions please refer to oval eye no. 534 on page 10.09. With wire rope pulleys No. 37 size 100 - 150 mm made of polyamide or size 100 - 480 mm made of steel with plain bearing. All dimensions in mm.

Outside diameter		**100**	**125**	**150**	**175**	**200**	**225**	**250**	**310**	**350**	**400**	**480**
Groove base diameter		80	105	125	145	170	185	210	260	300	340	410
for wire rope diameter up to		7	9	11	12	15	16	18	23	26	30	32
Case width		130	150	165	210	210	265	265	325	365	420	510
No. 41	adm. load at oval eye kg	500	1000	2000	3000	3000	5000	5000	8000	10000	12500	16000
with	clear oval eye dimens.	29x50	34x60	26x58	32x72	32x72	40x94	40x94	49x115	54x125	60x144	66x163
1 sheave	axial length	55	55	65	82	82	90	90	110	115	130	160
	overall length with o. eye	345	370	415	520	550	690	690	880	950	1030	1180
	weight in kg about	3,00	3,50	5,50	11,00	12,50	20,00	21,00	42,00	50,00	93,00	123.00
No. 42	adm. load at oval eye kg	1000	1600	3000	5000	5000	8000	8000	12500	16000	20000	25000
with	clear oval eye dimens.	34x60	26x58	32x72	40x94	40x94	49x115	49x115	60x144	66x163	72x173	80x192
2 sheaves	axial length	81	86	113	130	130	150	150	180	195	225	250
	overall length with o. eye	360	375	450	570	590	725	725	920	1040	1080	1230
	weight in kg about	5,00	6,00	9,50	15,00	19,00	34,50	36,50	73,00	95,00	167,00	178,00
No. 43	adm. load at oval eye kg	1600	2000	5000	8000	8000	10000	12500	20000	25000	32000	40000
with	clear oval eye dimens.	26x58	26x58	40x94	49x115	49x115	54x125	60x144	72x173	80x192	90x216	100x240
3 sheaves	axial length	106	115	135	177	177	210	210	255	260	310	320
	overall length with o. eye	360	380	525	660	690	740	770	980	1090	1110	1260
	weight in kg about	5,50	8,50	16,00	20,00	23,50	55,00	58,50	105,00	126,00	235,00	248,00
No. 44	adm. load at oval eye kg	2000	3000	5000	8000	10000	12500	16000	25000	32000	40000	50000
with	clear oval eye dimens.	26x58	32x72	40x94	49x115	54x125	60x144	66x163	80x192	90x216	100x240	110x264
4 sheaves	axial length	145	150	180	255	255	280	280	340	350	410	450
	overall length with o. eye	365	390	525	580	610	790	820	930	1000	1140	1300
	weight in kg about	7,50	12,00	20,00	38,00	44,00	74,00	78,00	136,00	157,00	312,00	327,00
No. 46	adm. load at oval eye kg	500	1000	2000	3000	3000	5000	5000	8000	10000	12500	16000
Snatch	clear oval eye dimens.	29x50	34x60	26x58	32x72	32x72	40x94	40x94	49x115	54x125	60x144	66x163
block with	axial length	55	61	73	90	90	105	105	120	125	160	190
1 sheave	overall length with o. eye	310	345	375	475	505	615	615	750	780	900	1030
	weight in kg about	3,00	3,50	6,00	11,00	12,00	19,50	20,50	36,00	47,00	113,00	128,00
No. 462	adm. load at oval eye kg	1000	1600	3000	5000	5000	8000	8000	12500	16000	20000	25000
with	clear oval eye dimens.	34x60	26x58	32x72	40x94	40x94	49x115	49x115	60x144	66x163	72x173	80x192
2 sheaves	axial length	84	90	114	145	145	170	170	200	210	255	280
	overall length with o. eye	425	450	535	640	685	845	845	1030	1060	1230	1400
	weight in kg about	5,50	6,50	11,50	20,00	23,50	26,00	27,00	65,00	68,00	165,00	175,00

Load table for wire rope blocks and wire rope tackle blocks.

Pull downwards.

Outside diameter			mm	100	125	150	175	200	225	250	310	350	400	480
Block with 1 sheave		rope pull	kg	260	520	1040	1560	1560	2600	2600	3900	5200	6500	7800
		adm. load	kg	250	500	1000	1500	1500	2500	2500	3750	5000	6250	7500
Tackle block	1 sheave above	rope pull	kg	177	355	710	1060	1060	1770	1770	2650	3540	4150	5200
	1 sheave below	adm. load	kg	323	645	1290	1940	1940	3230	3230	4850	6460	8100	9700
Tackle block	2 sheaves above	rope pull	kg	262	380	760	1140	1140	1900	1900	2850	3800	4760	5700
	1 sheave below	adm. load	kg	500	1000	2000	3000	3000	5000	5000	7500	10000	12500	15000
Tackle block	2 sheaves above	rope pull	kg	230	345	690	1150	1150	1700	1700	2875	3450	4600	5750
	2 sheaves below	adm. load	kg	770	1155	2310	3850	3850	5800	5800	9625	11550	15400	19250
Tackle block	3 sheaves above	rope pull	kg	250	370	750	1240	1240	1850	1850	3100	3720	4950	6200
	2 sheaves below	adm. load	kg	1000	1500	3000	5000	5000	7500	7500	12500	15000	20000	25000
Tackle block	3 sheaves above	rope pull	kg	270	355	880	1330	1330	1770	2200	3540	4410	5650	7100
	3 sheaves below	adm. load	kg	1230	1650	4120	6170	6170	8230	10300	16460	20590	26350	32900
Tackle block	4 sheaves above	rope pull	kg	290	385	820	1200	1200	1920	2400	3840	4800	6140	6450
	3 sheaves below	adm. load	kg	1500	2000	4180	6300	6300	10000	12500	20000	25000	32000	33550
Tackle block	4 sheaves above	rope pull	kg	300	450	750	1100	1100	1850	2200	3850	4800	6000	6000
	4 sheaves below	adm. load	kg	1700	2550	4250	6400	6400	10650	12800	21150	27200	34000	44000

Pull upwards.

Outside diameter			mm	100	125	150	175	200	225	250	310	350	400	480
Block with 1 sheave		rope pull	kg	260	520	1040	1560	1560	2600	2600	3900	5200	6500	7800
		adm. load	kg	500	1000	2000	3000	3000	5000	5000	7500	10000	12500	15000
Tackle block	1 sheave above	rope pull	kg	183	366	730	1100	1100	1830	1830	2740	3660	4570	5150
	1 sheave below	adm. load	kg	500	1000	2000	3000	3000	5000	5000	7500	10000	12500	15000
Tackle block	1 sheave above	rope pull	kg	200	400	800	1200	1200	2000	2000	3000	4000	5000	6000
	2 sheaves below	adm. load	kg	700	1400	2800	4200	4200	7000	7000	10500	14000	17500	21000
Tackle block	2 sheaves above	rope pull	kg	238	356	713	1190	1190	1780	1780	2970	3560	3750	5940
	2 sheaves below	adm. load	kg	1000	1500	3000	5000	5000	7500	7500	12500	15000	20000	25000
Tackle block	2 sheaves above	rope pull	kg	260	390	780	1300	1300	1950	1950	3250	3900	5000	6500
	3 sheaves below	adm. load	kg	1260	1890	3780	6300	6300	9450	9450	15750	18900	25000	31500
Tackle block	3 sheaves above	rope pull	kg	276	368	920	1380	1380	1840	2300	3680	4600	5900	7350
	3 sheaves below	adm. load	kg	1500	2000	5000	7500	7500	10000	12500	20000	25000	32000	40000
Tackle block	3 sheaves above	rope pull	kg	300	400	840	1250	1250	2000	2500	4000	5000	6400	6740
	4 sheaves below	adm. load	kg	1800	2400	5000	7500	7500	12000	15000	24000	30000	38400	40000
Tackle block	4 sheaves above	rope pull	kg	311	466	777	1160	1160	1940	2330	3880	4970	6220	6220
	4 sheaves below	adm. load	kg	2000	3000	5000	7500	7500	12500	15000	25000	32000	40000	50000

Spare pulleys

for wire rope blocks No. 31 - 462

No. 37 Wire rope pulleys with plain bearing

Polyamide or steel. With anti-rust coating fitting our wire rope blocks. If required made of steel with precision ball bearing. Pulleys with a diameter of 100 - 150 mm are made of material PA 6G or 100 - 600 mm made of steel S355. All dimensions in mm.

Please specify in order:

GG/R =
Polyamide
with plain bearing

ST/R =
steel
with plain bearing

ST/W =
steel
with roller bearing

ST/K =
steel
with ball bearing

Outside diameter Groove base diameter	**100** 80	**125** 105	**150/1** 125	**150/2** 125	**175** 145
Groove radius	6	6,5	7,5	7,5	9
Groove depth	10	11	12	12	15
Rim width	21	22	26	26	37
Bore for „R" and „W"	19	22	30	35	40
Bore for "K"	20	25	30	35	40
Hub length	23	24	29	29	40
Hub diameter	40	48	63	63	70
Rope diameter max.	11	12	13	13	17
Type of bearing	6004 Z	6005 Z	6006 Z	6007 Z	6008 Z
Loading capacity in kg	500	1000	2000	2000	3000
Weight in kg about	0,15	0,90	1,80	1,80	3,20

Outside diameter Groove base diameter	**200** 170	**225** 185	**250** 210	**310/1** 260	**310/2** 260
Groove radius	9	12	12	14	14
Groove depth	15	20	20	25	25
Rim width	37	42	42	50	50
Bore for „R" and „W"	40	55	55	60	65
Bore for "K"	40	55	55	60	65
Hub length	40	48	48	56	56
Hub diameter	70	85	85	100	100
Rope diameter max.	17	23	23	26	26
Type of bearing	6008 Z	6011 Z	6011 Z	6012 Z	6013 Z
Loading capacity in kg	3000	5000	5000	8000	8000
Weight in kg about	3,70	5,00	6,00	8,00	8,00

Outside diameter Groove base diameter	**350** 300	**400** 340	**480** 400	**490** 400	**600** 500
Groove radius	15	16	16	18	20
Groove depth	25	30	40	45	50
Rim width	50	60	65	65	85
Bore for „R" and „W"	70	80	85	100	125
Bore for "K"	70	80	85	100	130
Hub length	56	68	68	80	94
Hub diameter	110	125	135	155	180
Rope diameter max.	28	30	30	34	38
Type of bearing	6014 Z	6216 Z	6217 Z	6220 Z	5026 PP
Loading capacity in kg	10000	12500	16000	20000	32000
Weight in kg about	12,50	20,00	30,00	32,00	40,00

No. 60 - 62 Rope pulleys

with bolt. Fitted with polyamide pulleys with plain bearing.
All dimensions in mm.

Article No.	60	62
Pulley outside diameter	125	125
Groove base diameter	100	100
for wire rope diameter up to	12	14
Case width	40	160
adm. load at the suspension	1600	3200
Bolt diameter	19,5	35
Axial length	58	50
Overall length	196	245
Weight in kg about	1,25	2,75

No. 70 - 74 Rope pulleys

with bolt. Fitted with steel pulleys with plain bearing.
All dimensions in mm.

Article No.	70	74
Pulley outside diameter	200	250
Groove base diameter	170	200
for wire rope diameter up to	17	14
Case width	210	265
adm. load at the suspension	5000	7500
Bolt diameter	30	40
Axial length	89	120
Overall length	335	360
Weight in kg about	9	19

No. 84 Rope pulley with rigid side plates

with captive screw plug. Roller made of steel with ball bearings, galvanized, side plates coated.
All dimensions in mm.

Pulley outside diameter Groove base diameter	**90** 65	**130** 108	**160** 138	**240** 214
for wire rope diameter up to	10	14	14	16
perm. tension force in case of ground course in kg	3000	5000	16000	24000
winch tensile force max. in case of 180° deflection in kg	1500	2500	8000	12000
Axial length	100	132	172	110
Overall length	173	227	300	430
Weight in kg about	1,70	3,70	6,40	19,00

No. 86 Rope pulley with movable side plates

with Roller made of steel with ball bearings, galvanized, side plates coated. Rope assembly by twisting the side plates. All dimensions in mm.

Pulley outside diameter Groove base diameter	**105** 82	**140** 122	**174** 143
for wire rope diameter up to	15	14	16
perm. tension force in case of ground course in kg	3000	6000	12000
winch tensile force max. in case of 180° deflection in kg	1500	3000	6000
Axial length	130	175	210
Overall length	200	272	333
Weight in kg about	1,90	4,30	7,10

The max. admissible load must not be exceeded. Safety factor 2.

Manila rope blocks

made of stainless steel

No. 91

No. 92

No. 95

No. 91 - 95 Manila rope blocks made of stainless steel

Material AISI 316, with swivel oval eye and becket. With stainless steel rope pulley and brass bush.
All dimensions in mm.

Pulley outside diameter Groove base diameter for wire rope diameter up to Case width		**75** 60 14 84	**100** 80 16 112	**125** 103 17 145
No. 91 with **1 sheave**	adm. load at oval eye kg clear oval eye dimensions Axial length Overall length with oval eye Weight in kg about	500 24 x 38 49 250 1,00	750 24 x 38 52 310 1,85	1000 32 x 41 60 360 2,45
No. 92 with **2 sheaves**	adm. load at oval eye kg clear oval eye dimensions Axial length Overall length with oval eye Weight in kg about	750 24 x 38 78 250 1,52	1000 24 x 38 80 310 2,80	1250 32 x 41 85 360 3,60
No. 95 Snatch block with **1 sheave**	adm. load at oval eye kg clear oval eye dimensions Axial length Overall length with oval eye Weight in kg about	500 24 x 38 49 250 1,10	750 24 x 38 52 310 1,95	1000 32 x 41 60 360 2,55

Spare pulleys for stainless steel manila rope No. 91 - 95

No. 96 Stainless steel rope pulley with brass bush

Material AISI 316. All dimensions in mm.

Outside diameter Groove base diameter	**25** 17	**32** 21	**50** 34	**75** 60	**100** 80	**125** 103
Groove radius	6	6	7,5	7	9	10
Groove depth	5	5	8	7	10	10
Rim width	17	17	21	20	25	25
Bore for axle	8	8	10	13	17	17
Hub length	17	17	21	21	26	28
Hub diameter	-	-	23	30	35	35
Rope diameter max.	10	10	14	14	16	17
Loading capacity in kg	150	150	250	500	750	1000
Weight in kg about	0,04	0,06	0,16	0,28	0,56	0,59

Galvanized blocks

(block rope pulleys)

Pulleys made of polyamide

Galvanized rope blocks

with pulleys No. 901 made of polyamide, case zinc die-casted

No. 411 Galvanized block rope pulleys, 1 sheave, with a fixed becket

All dimensions in mm.

Pulley outside diameter Groove base diameter	**15** 9	**20** 12	**25** 17	**30** 18	**40** 26	**50** 32
Groove radius	3	3	3,5	4	4,5	6
Groove depth	3	4	4	6	7	9
Clear becket dimensions	10 x 14	11 x 15	12 x 17	13 x 21	14 x 25	16 x 25
Total length	50	60	70	80	93	113
Rope diameter max.	5	6	7	8	9	11
Weight in kg about	0,02	0,04	0,05	0,08	0,13	0,19

No. 413 Galvanized block rope pulleys, 1 sheave, with a swivel eye

All dimensions in mm.

Pulley outside diameter Groove base diameter	**15** 9	**20** 12	**25** 17	**30** 18	**40** 26	**50** 32
Groove radius	3	3	3,5	4	4,5	6
Groove depth	3	4	4	6	7	9
Clear becket dimensions	13 x 13	16 x 16	16 x 19	18 x 19	28 x 28	28 x 28
Total length	56	69	73	85	108	125
Rope diameter max.	5	6	7	8	9	11
Weight in kg about	0,03	0,05	0,06	0,10	0,15	0,21

No. 414 Galvanized block rope pulleys, 2 sheaves, with a fixed becket

All dimensions in mm.

Pulley outside diameter Groove base diameter	**15** 9	**20** 12	**25** 17	**30** 18	**40** 26	**50** 32
Groove radius	3	3	3,5	4	4,5	6
Groove depth	3	4	4	6	7	9
Clear becket dimensions	10 x 14	11 x 15	12 x 17	13 x 21	16 x 25	16 x 25
Total length	50	60	70	80	105	117
Rope diameter max.	5	6	7	8	9	11
Weight in kg about	0,04	0,06	0,09	0,13	0,27	0,41

Span blocks

former DIN 82221

Span blocks

Please specify in order:

A/GG = with swivel oval eye and cast iron pulley

A/ST = with swivel oval eye and steel pulley

B/GG = with double lugs and cast iron pulley

B/ST = with double lugs and steel pulley

No. 601 A

No. 601 B

No. 601 Span blocks

former DIN 82221. With rope sheaves No. 604 former DIN 82235 with self-lubricating bush.
All dimensions in mm.

Nominal size	**1**	**2**	**3**	**4**	**5**	**6**	**8**	**10**	**12**
Pulley outside diameter	**135**	**180**	**220**	**260**	**290**	**330**	**365**	**415**	**455**
Groove base diameter	112	150	180	216	236	270	300	340	375
for wire rope diameter up to	14	18	22	24	28	32	36	40	44
Case width	150	200	240	290	320	360	400	450	490
adm. load at swivel in kg	2000	4000	6300	8000	10000	12500	16000	20000	25000
Rope pull in kg	1000	2000	3150	4000	5000	6300	8000	10000	12500
Clear oval eye dimensions	26 x 58	40 x 94	45 x 108	49 x 115	54 x 125	60 x 144	66 x 163	72 x 173	80 x 192
Material diameter of oval eye	18	28	32	35	39	44	49	54	59
Clear double lug dimensions w x h	26 x 20	35 x 24	45 x 32	49 x 34	58 x 39	64 x 44	70 x 45	74 x 46	80 x 51
Double lug centre up to double lug base	31	39	51	56	63	70	75	80	87
Material diameter of double lug	22	30	39	45	48	52	60	68	72
Axial length	78	98	107	123	137	144	159	177	195
Axle diameter	22	32	40	45	50	55	65	70	80
Overall length with fitting	325	430	525	615	687	760	870	940	1030
Weight in kg about	5,00	13,00	21,00	30,00	35,00	50,00	60,00	100,00	120,00

Spare Pulleys

for span blocks No. 601

Please specify in order:

GG = cast iron
ST = steel

No. 604 Rope sheaves for wire ropes former DIN 82235

Cast iron or steel, solid base and self-lubricating bush, fitting span blocks No. 601 former DIN 82221 and snatch blocks for wire rope No. 617 former DIN 82220. Groove base diameter = 9x diameter of rope.
All dimensions in mm.

Nominal size **Pulley outside diameter** Groove base diameter	**1** **135** 112	**2** **180** 150	**3** **220** 180	**4** **260** 216	**5** **290** 236	**6** **330** 270	**8** **365** 300	**10** **415** 340	**12** **455** 375
Groove radius	8	10	12	13	15	17	19	21	23
Groove depth	11	15	20	22	27	30	32	37	40
Rim width	25	31	39	45	51	57	64	71	79
Bore for axle	22	32	40	45	50	55	65	70	80
Hub length	27	34	42	48	54	60	67	75	83
Hub diameter	42	56	70	80	85	96	105	120	125
Rope diameter max.	14	18	22	24	28	32	36	40	44
Loading capacity in kg	2000	4000	6300	8000	10000	12500	16000	20000	25000
Weight in kg about	2,00	4,00	8,00	10,00	12,00	16,00	20,00	28,00	35,00

Upper/lower span blocks

Upper span blocks former DIN 82223
Lower span blocks former DIN 82222

Upper span blocks

Please specify in order:

A/ST = with swivel oval eye and steel pulley

B/ST = with swivel double lug and steel pulley

No. 603 A

No. 603 B

No. 603 Upper span blocks former DIN 82223

for double reeved span. With rope sheaves No. 615 former DIN 82236 with self-lubricating bush or red bronze bush. All dimensions in mm.

Nominal size	**1**	**2**	**3**	**4**	**5**	**6**	**8**
Pulley outside diameter	**195**	**260**	**320**	**380**	**430**	**460**	**515**
Groove base diameter	170	224	280	335	375	400	450
for wire rope diameter up to	12	16	20	24	26	28	32
Case width	210	280	340	410	460	490	550
adm. load at swivel in kg	3000	6000	9500	12000	15000	19000	24000
Rope pull in kg	1000	2000	3150	4000	5000	6300	8000
Clear oval eye dimensions	32 x 72	45 x 108	54 x 125	60 x 144	66 x 163	72 x 173	80 x 192
Material diameter of oval eye	23	32	39	44	49	54	59
Clear double lug dimensions w x h	32 x 23	45 x 32	–	64 x 44	70 x 45	74 x 46	80 x 51
Double lug centre up to Double lug base	36	51	–	70	75	80	87
Material diameter of double lug bolt	27	39	–	52	60	68	72
Axial length	78	98	107	120	136	144	159
Axle diameter	22	32	40	45	50	55	65
Overall length with fitting	490	615	755	810	1010	1090	1120
Weight in kg about	15,00	26,00	43,00	54,00	76,00	115,00	170,00

Lower span blocks

Please specify in order:

A/ST = with swivel oval eye and steel pulley

B/ST = with swivel double lug and steel pulley

No. 605 A

No. 605 B

No. 605 Lower span blocks former DIN 82222

for double reeved span. With rope sheaves No. 615 former DIN 82236 with self-lubricating bush or red bronze bush. All dimensions in mm.

Nominal size	**1**	**2**	**3**	**4**	**5**	**6**	**8**
Pulley outside diameter	**195**	**260**	**320**	**380**	**430**	**460**	**515**
Groove base diameter	170	224	280	335	375	400	450
for wire rope diameter up to	12	16	20	24	26	28	32
Case width	210	280	340	410	460	490	550
adm. load at swivel in kg	2000	4000	6300	8000	10000	12500	16000
Rope pull in kg	1000	2000	3150	4000	5000	6300	8000
Clear oval eye dimensions	26 x 58	40 x 94	45 x 108	49 x 115	54 x 125	60 x 144	66 x 163
Material diameter of oval eye	18	28	32	35	39	44	49
Clear double lug dimensions w x h	26 x 20	35 x 24	–	49 x 34	58 x 39	64 x 44	70 x 45
Double lug centre up to double lug base	31	39	–	56	63	70	75
Material diameter of double lug bolt	22	30	–	45	48	52	60
Axial length	78	98	107	120	136	144	159
Axle diameter	22	32	40	45	50	55	65
Overall length with fitting	436	605	732	825	936	1031	1159
Weight in kg about	10,00	19,00	32,00	43,00	62,00	87,00	125,00

Cargo and lead blocks

Without becket former DIN 82226

Cargo and lead blocks

Please specify in order:

B = with swivel oval eye
C = with swivel double lug

No. 611 B

No. 611 C

No. 611 Cargo and lead blocks without becket

former DIN 82226. With rope sheaves No. 615 made of steel, former DIN 82236 with self-lubricating bush.
All dimensions in mm.

Nominal size	**1**	**2**	**3**	**5**	**8**
Pulley outside diameter	**195**	**260**	**320**	**430**	**515**
Groove base diameter	170	224	280	375	450
for wire rope diameter up to	12	16	20	26	32
Clear width	29	36	44	56	70
Case width	230	300	370	480	580
Axial length	78	98	107	136	159
Axle diameter	22	32	40	50	65
adm. load at swivel in kg	2000	4000	6300	10000	16000
Rope pull in kg	1000	2000	3150	5000	8000
Clear oval eye dimensions	26 x 58	40 x 94	45 x 108	54 x 125	66 x 163
Material diameter of oval eye	18	28	32	39	49
Overall length with oval eye	441	610	738	939	1169
Weight in kg about	12,00	20,00	32,00	65,00	130,00
Clear double lug dimensions w x h	26 x 20	35 x 24	–	58 x 39	70 x 45
Double lug centre up to Double lug base	31	39	–	63	75
Material diameter of double lug bolt	22	30	–	48	60
Overall length with double lug	450	610	–	920	1130
Weight in kg about	13,00	22,00	–	69,00	136,00

Spare pulleys

for span blocks No. 603 and No. 605 and cargo and lead blocks No. 611

No. 615 Rope sheaves for wire ropes former DIN 82236

made of steel, with solid base and self-lubricating bush.
Groove base diameter = 14x diameter of rope.
All dimensions in mm.

Nominal size **Outside diameter** Groove base diameter	**1** **195** 170	**2** **260** 224	**3** **320** 280	**4** **380** 335	**5** **430** 375	**6** **460** 400	**8** **515** 450
Groove radius	7	9	11	13	14	15	17
Groove depth	12	18	20	22	27	30	32
Rim width	25	31	39	45	51	57	64
Bore for axle	22	32	40	45	50	55	65
Hub length	27	34	42	48	54	60	67
Hub diameter	55	70	85	90	100	110	120
Rope diameter max.	12	16	20	24	26	28	32
Loading capacity in kg	2000	4000	6300	8000	10000	12500	16000
Weight in kg about	3,00	5,00	9,00	13,00	21,00	25,00	35,00

Snatch blocks

for wire rope former DIN 82220 with
swivel oval eye acc. DIN 82006

Please specify in order:
GG = with cast iron pulley
ST = with steel pulley

No. 617 Snatch blocks for wire rope

former DIN 82220 with swivel oval eye acc. to DIN 82006. With rope sheaves No. 604 former DIN 82235 with self-lubricating bush.
All dimensions in mm.

Nominal size	**1**	**2**	**3**	**5**	**8**	**10**
Pulley outside diameter	**135**	**180**	**220**	**290**	**365**	**415**
Groove base diameter	112	150	180	236	300	340
for wire rope diameter up to	14	18	22	28	36	40
Case width	150	200	240	320	400	450
adm. load at oval eye in kg	2000	4000	6300	10000	16000	20000
Rope pull in kg	1000	2000	3150	5000	8000	10000
Clear oval eye dimensions	26 x 58	40 x 94	45 x 108	54 x 125	66 x 163	72 x 173
Material diameter of oval eye	18	28	32	39	49	54
Axial length	66	98	107	137	159	177
Axle diameter	22	32	40	50	65	70
Overall length with oval eye	325	465	530	680	850	1000
Weight in kg about	5,00	13,00	21,00	44,00	83,00	125,00

Spare pulleys **fitting snatch blocks for wire rope No. 617**

Please specify in order:
GG = cast iron
ST = steel

No. 604 Rope sheaves for wire ropes former DIN 82235

with solid base and self-lubricating bush, fitting span blocks No. 601 former DIN 82221 and snatch blocks for wire rope No. 617 former DIN 82220. Groove base diameter = 9x diameter of rope.
All dimensions in mm.

Nominal size	**1**	**2**	**3**	**4**	**5**	**6**	**8**	**10**	**12**
Outside diameter	**135**	**180**	**220**	**260**	**290**	**330**	**365**	**415**	**455**
Groove base diameter	112	150	180	216	236	270	300	340	375
Groove radius	8	10	12	13	15	17	19	21	23
Groove depth	11	15	20	22	27	30	32	37	40
Rim width	25	31	39	45	51	57	64	71	79
Bore for axle	22	32	40	45	50	55	65	70	80
Hub length	27	34	42	48	54	60	67	75	83
Hub diameter	42	56	70	80	85	96	105	120	125
Rope diameter max.	14	18	22	24	28	32	36	40	44
Loading capacity in kg	2000	4000	6300	8000	10000	12500	16000	20000	25000
Weight in kg about	2,00	4,00	8,00	10,00	12,00	16,00	20,00	28,00	35,00

Wire rope pulleys

Manila rope pulleys

Product								Page
Wire rope pulley No. 16 d								2.02
Wire rope pulley No. 23								2.02
Wire rope pulley No. 26								2.03
Heavy wire rope pulley No. 27								2.03
Light rope pulley No. 28								2.04
Rope and door pulley No. 30								2.04
Wire rope pulley No. 37								2.05
Wire rope pulley No. 163								2.06
Wire rope pulley No. 163 K								2.06
Wire rope pulley No. 167								2.07
Wire rope pulley No. 169								2.07
Wire rope pulley No. 169 K								2.08
Rope pulley No. 171								2.08
Rope pulley No. 181								2.09
Rope pulley No. 188								2.09
Rope sheave No. 604 former DIN 82235								2.10

Product								Page
Rope sheave No. 615 former DIN 82236								2.10
Wire rope pulley No. 900 made of PA 6G								2.11
Rope pulley No. 903 made of polyamide								2.12
Ball bearing pulley No. 1209								2.13
Rope pulley No. 1210								2.13
Stainless steel rope pulley No. 1300								2.14
Stainless steel rope pulley No. 1302								2.14
Stainless steel rope pulley No. 1304								2.15
Manila rope pulley No. 16 h								2.18
Light rope pulley No. 19								2.18
Brass cord pulley No. 25 a								2.19
Brass cord pulley No. 25 b								2.19
Stainless steel rope pulley No. 96								2.20
Cord pulley No. 150								2.21
Rope or cord pulley No. 151								2.21
Aluminium rope pulley No. 170								2.22

Product								Page
Manila rope pulley No. 427								**2.22**
Rope pulley No. 901 made of polyamide								**2.23** **+ 2.24**

Wire rope pulleys

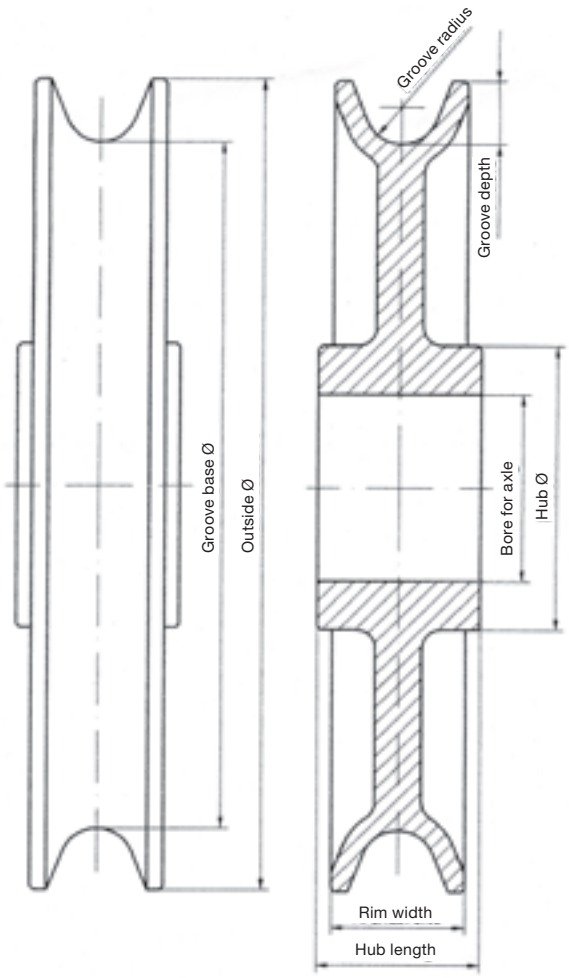

For all rope sheaves:

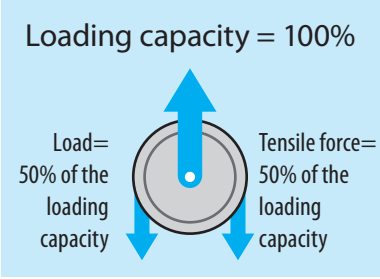

Wire rope pulleys

made of cast iron

No. 16 d Wire rope pulleys made of cast iron

groove not machined, hub bored, fitting our manila rope blocks. If required also with red bronze bush (design „R“) or roller bearing (design „W“).
All dimensions in mm.

Outside diameter Groove base diameter	**60** 48	**75** 61	**90** 72	**100** 80	**120** 98	**130** 104	**150** 120	**175** 141	**200** 162	**230** 184
Groove radius	3	3,5	4,5	5	5,5	6,5	7,5	8,5	9,5	11,5
Groove depth	6	7	9	10	11	13	15	17	19	23
Rim width	15	15	18	20	28	29	32	39	48	57
Bore for axle	11	12	14	14	19	22	25	27	30	35
Hub length	16	16	20	24	30	32	35	43	52	61
Hub diameter	32	33	36	40	46	52	54	60	63	71
Rope diameter max.	6	7	8	9	10	12	14	16	18	22
Loading capacity in kg	75	100	150	250	500	500	1000	1500	2000	3000
Weight in kg about	0,18	0,26	0,40	0,57	0,95	1,25	1,60	2,50	4,10	5,80

No. 23 Wire rope pulleys made of cast iron

groove machined, roller bearing hub bored, fitting gin blocks No. 22 and wire rope pulleys No. 829.
If required also with red bronze bush (design „R“) or roller bearing (design „W“). By 310 mm Ø the groove is not machined.
All dimensions in mm.

Outside diameter Groove base diameter	**115** 89	**155** 129	**220** 184	**260** 222	**310** 250
Groove radius	5,5	5,5	8,5	9,5	14
Groove depth	13	13	18	19	30
Rim width	25	27	32	40	52
Bore for axle	14	19	22	25	35
Hub length	27	28	35	43	56
Hub diameter	36	48	54	65	85
Rope diameter max.	10	10	16	18	26
Loading capacity in kg	500	1000	2000	3000	5000
Weight in kg about	0,90	1,40	3,30	5,20	10,00

No. 26 Wire rope pulleys made of cast iron

with solid base and self-lubricating bush.
All dimensions in mm.

Outside diameter Groove base diameter	**200** 168	**250** 214
Groove radius	8,5	11
Groove depth	16	18
Rim width	30	37
Bore for axle	22	32
Hub length	34	42
Hub diameter	55	85
Rope diameter max.	16	22
Loading capacity in kg	2000	4000
Weight in kg about	2,40	6,00

No. 27 Heavy wire rope pulleys made of cast iron

groove machined, hub bored, with solid base. If required also with red bronze bush (design „R“).
All dimensions in mm.

Outside diameter Groove base diameter	**110** 92	**135** 115	**165** 139	**190** 160	**220** 184	**245** 207	**270** 230	**300** 254	**325** 279	**350** 300	**400** 348
Groove radius	6	6	7	8	10	12	12,5	12,5	12,5	13	14
Groove depth	9	10	13	15	18	19	20	23	23	25	26
Rim width	21	22	24	28	32	37	38	39	39	43	48
Bore for axle	18	20	24	26	28	32	34	40	48	50	60
Hub length	24	24	29	31	36	40	42	42	46	46	50
Hub diameter	50	57	65	72	82	94	100	100	110	130	140
Rope diameter max.	11	11	13	15	19	22	23	23	23	24	26
Loading capacity in kg	1000	1200	1400	1600	1800	2000	2200	2400	2600	2800	3200
Weight in kg about	0,80	1,30	2,00	2,90	4,20	6,00	6,80	7,50	9,70	12,00	17,60

Rope pulleys
made of cast iron

No. 28 Light rope pulleys made of cast iron

with narrow, deep groove, groove machined, hub bored, with straight spokes, fitting pulleys No. 161.
All dimensions in mm.

Outside diameter Groove base diameter	**80** 67	**100** 83	**130** 108
Groove radius	4,5	5,5	6,5
Groove depth	6,5	8,5	11
Rim width	13	16	19
Bore for axle	8	10	12
Hub length	17	19	23
Hub diameter	20	22	28
Rope diameter max.	8	10	12
Loading capacity in kg	125	130	150
Weight in kg about	0,18	0,30	0,48

No. 30 Rope and door pulleys cast iron

with round groove, groove machined, hub bored.
All dimensions in mm.

Outside diameter Groove base diameter	**80** 64	**100** 80	**120** 96	**140** 112	**160** 130	**180** 148	**200** 166
Groove radius	5	6	7	8	8,5	9	10
Groove depth	8	10	12	14	15	16	17
Rim width	18	21	22	24	24	27	30
Bore for axle	10	12	14	16	18	18	18
Hub length	22	24	25	27	34	35	38
Hub diameter	24	28	32	38	42	45	50
Rope diameter max.	9	11	13	15	16	17	19
Loading capacity in kg	125	150	200	250	300	300	350
Weight in kg about	0,28	0,50	0,70	1,19	1,54	2,17	3,45

No. 37 Wire rope pulley with plain bearing

polyamide or steel, anti-rust coating, fitting our wire rope blocks. If required also made of steel with precision ball bearing. Pulleys with a diameter of 100 - 150 mm made of material PA 6G, self-lubricating.
All dimensions in mm.

Please specify in order:

GG/R = PA with plain bearing

ST/R = steel with plain bearing

ST/W = steel with roller bearing

ST/K = steel with ball bearing

Outside diameter Groove base diameter	**100** 80	**125** 105	**150/1** 125	**150/2** 125	**175** 145
Groove radius	6	6,5	7,5	7,5	9
Groove depth	10	11	12	12	15
Rim width	21	22	26	26	37
Bore for „R" and „W"	19	22	30	35	40
Bore for "K"	20	25	30	35	40
Hub length	23	24	29	29	40
Hub diameter	40	48	63	63	70
Rope diameter max.	11	12	13	13	17
Type of bearing	6004 Z	6005 Z	6006 Z	6007 Z	6008 Z
Loading capacity in kg	500	1000	2000	2000	3000
Weight in kg about	0,15	0,90	1,80	1,80	3,20

Outside diameter Groove base diameter	**200** 170	**225** 185	**250** 210	**310/1** 260	**310/2** 260
Groove radius	9	12	12	14	14
Groove depth	15	20	20	25	25
Rim width	37	42	42	50	50
Bore for „R" and „W"	40	55	55	60	65
Bore for "K"	40	55	55	60	65
Hub length	40	48	48	56	56
Hub diameter	70	85	85	100	100
Rope diameter max.	17	23	23	26	26
Type of bearing	6008 Z	6011 Z	6011 Z	6012 Z	6013 Z
Loading capacity in kg	3000	5000	5000	8000	8000
Weight in kg about	3,70	5,00	6,00	8,00	8,00

Outside diameter Groove base diameter	**350** 300	**400** 340	**480** 400	**490** 400	**600** 500
Groove radius	15	16	16	18	20
Groove depth	25	30	40	45	50
Rim width	50	60	65	65	85
Bore for „R" and „W"	70	80	85	100	125
Bore for "K"	70	80	85	100	130
Hub length	56	68	68	80	94
Hub diameter	110	125	135	155	180
Rope diameter max.	28	30	30	34	38
Type of bearing	6014 Z	6216 Z	6217 Z	6220 Z	5026 PP
Loading capacity in kg	10000	12500	16000	20000	32000
Weight in kg about	12,50	20,00	30,00	32,00	40,00

Rope pulleys
made of steel

No. 163 Rope pulleys made of steel

galvanized, with maintenance-free plain bearing (DU bush), fitting pulleys No. 162 and pulleys No. 164.
All dimensions in mm.

Outside diameter Groove base diameter	**50** 38	**75** 60	**100** 80	**125** 103	**150** 126	**200** 166	**250** 213	**300** 257
Groove radius	4	5	6	7	8	5,3	6,5	8,5
Groove depth	6	7,5	10	11	12	17	18,5	21,5
Rim width	12	18	21	22	24	32	36	40
Bore for axle	10	12	16	16	20	30	40	50
Hub length	15	20	25	25	25	42	45	62
Hub diameter	29	36	42	45	56	80	95	110
Rope diameter max.	6	8	9	10	12	10	12	16
Loading capacity in kg	100	200	300	500	750	1500	2000	4000
Weight in kg about	0,10	0,30	0,60	0,90	1,40	4,30	7,80	12,10

No. 163 K Rope pulleys made of steel

galvanized, groove machined, with sealed ball bearings.
All dimensions in mm.

Outside diameter Groove base diameter	**50** 38	**75** 60	**100** 80	**125** 103	**150** 126	**200** 166	**250** 213	**300** 257
Groove radius	4	5	6	7	8	5,3	6,5	8,5
Groove depth	6	7,5	10	11	12	17	18,5	21,5
Rim width	12	18	21	22	24	32	36	40
Bore for axle	10	12	15	20	20	30	40	50
Hub length	15	20	25	25	25	42	45	62
Hub diameter	29	36	42	45	56	80	95	110
Rope diameter max.	6	8	9	10	12	10	12	16
Type of bearing	6000-2RS1	6001-2RS1	6002-2RS1	6004-2RS1	6004-2RS1	6206-2RS1	6208-2RS1	6210-2RS1
Loading capacity in kg	100	200	300	500	750	1500	2000	4000
Weight in kg about	0,10	0,30	0,60	0,90	1,40	4,30	7,80	12,10

No. 167 Wire rope pulleys made of cast iron

groove not machined, hub bored, without bearing bush.
All dimensions in mm.

Outside diameter Groove base diameter	**140** 100	**200** 140	**250/1** 185
Groove radius	3	4	6
Groove depth	20	30	32
Rim width	28	40	42
Bore for axle	12	16	22
Hub length	35	45	50
Hub diameter	35	35	35
Rope diameter max.	6	8	12
Loading capacity in kg	250	1000	2000
Weight in kg about	1,10	2,30	6,30

No. 169 Wire rope pulleys made of cast iron

groove machined, fitting wire rope guide pulleys No. 191 and No. 192.
Outside diameter of 60 - 325 mm: self-lubricating bearing with grease chamber.
Outside diameter of 375 - 470 mm: bronze bearing with lubrication pockets.
All dimensions in mm.

Outside diameter Groove base diameter	**60** 48	**90** 72	**120** 100	**150** 125	**190** 160
Groove radius	1,5	2	2,5	3	4
Groove depth	6	9	10	12	15
Rim width	13	15	18	22	27
Bore for axle	8	14	14	22	32
Hub length	24	32	35	40	42
Hub diameter	22	32	35	46	62
Rope diameter max.	3	4	5	6	8
Loading capacity in kg	200	300	500	1000	1500
Weight in kg about	0,30	0,52	0,85	1,45	2,60

Outside diameter Groove base diameter	**235** 200	**280** 240	**325** 280	**375** 320	**470** 400
Groove radius	5	6	7	8	10
Groove depth	17	20	22	27	35
Rim width	32	36	41	48	58
Bore for axle	40	50	60	70	70
Hub length	50	62	70	85	90
Hub diameter	78	92	108	120	140
Rope diameter max.	10	12	14	16	20
Loading capacity in kg	2000	3000	4000	6400	10000
Weight in kg about	4,50	6,80	10,80	16,50	34,70

Wire rope pulleys

made of cast iron and aluminium

No. 169 K Wire rope pulleys made of cast iron

groove machined, with sealed ball bearings.
All dimensions in mm.

Outside diameter Groove base diameter	**120** 100	**150** 125	**190** 160	**235** 200	**280** 240	**325** 280	**375** 320
Groove radius	2,5	3	4	5	6	7	8
Groove depth	10	12	15	17	20	22	27
Rim width	18	22	27	32	36	41	50
Bore for axle	17	20	25	30	35	40	60
Hub length	35	41,5	34	37	62	70	48
Hub diameter	55	60	74	85	100	120	150
Rope diameter max.	5	6	8	10	12	14	16
Type of bearing	6203-2RS1	6004-2RS1	6205-2RS1	6206-2RS1	6207-2RS1	6208-2RS1	6212-2RS1
Loading capacity in kg	250	500	1000	1000	1500	2000	3200
Weight in kg about	0,85	1,45	2,60	4,50	6,80	10,80	16,50

No. 171 Rope pulleys made of aluminium

groove machined, with self-lubricating bush.
All dimensions in mm.

Outside diameter Groove base diameter	**65** 56	**75** 65	**90** 75	**115** 100	**125** 110	**150** 130
Groove radius	1,3	2,8	2,8	3,5	3,5	4,3
Groove depth	4,5	5	7,5	7,5	7,5	10
Rim width	6,5	11	11	12	12	15,8
Bore for axle	10	10	10	16	16	18
Hub length	8	12	12	14	14	16
Hub diameter	30	35	40	45	45	50
Rope diameter max.	2,5	5	5	6	6	8
Loading capacity in kg	100	360	360	630	630	700
Weight in kg about	0,06	0,12	0,16	0,28	0,34	0,57

No. 181 Rope pulleys made of steel

galvanized, groove machined, with sealed ball bearings, fitting pulleys No. 180.
All dimensions in mm.

Outside diameter Groove base diameter	**85** 60	**125** 90	**180** 135	**240** 185	**300** 230	**360** 280
Groove radius	3,2	4,8	7	9,5	12,5	15
Groove depth	12	17	22	27	35	40
Rim width	21	30	38	50	60	70
Bore for axle	12	20	25	35	45	60
Hub length	17,5	30	33	45	54	67
Hub diameter	40	65	75	110	130	170
Rope diameter max.	6	9	13	18	23	27
Type of bearing	6001-2RS	6204-2RS	6205-2RS	6307-2RS	6309-2RS	6312-2RS
Loading capacity in kg	500	1000	2000	4000	6400	10000
Weight in kg about	0,70	1,90	5,40	12,80	24,00	40,00

No. 188 Rope pulleys made of steel

coated RAL 5010 (blue), groove profiles acc. to DIN 15061/FEM 9.661, with ball bearings and shims.
All dimensions in mm.

Outside diameter Groove base diameter	**80** 66	**90** 80	**145** 125	**185** 160	**270/1** 245	**270/2** 246	**325** 297	**400/1** 368	**400/2** 364
Groove radius	2,2	2,2	3,2	4,2	5,3	6,5	7,5	8,7	9,7
Groove depth	6	5	10	12	12	12	14	16	18
Rim width	16	16	22	28	30	31	42	45	45
Bore for axle	20	20	25	30	40	40	50	50	50
Assembly dimension	28	28	34	42,5	40,5	40,5	60	60	60
Hub diameter	55	60	80	100	150	150	200	200	200
Rope diameter max.	4	4	6	8	10	12	14	16	18
Type of bearing	6004-ZZ	6004-ZZ	6205-ZZ	6306-ZZ	6208-ZZ	6208-ZZ	6310-ZZ	6310-ZZ	6310-ZZ
Loading capacity in kg	1000	1000	1600	3260	3600	3600	6400	7600	7600
Weight in kg about	0,60	0,80	2,60	5,30	12,40	12,40	46,00	70,00	70,00

Please specify in order:
GG = cast iron
ST = steel

No. 604 Rope sheaves for wire ropes former DIN 82235

with solid base and bush, fitting span blocks No. 601 former DIN 82221 and snatch blocks for wire rope No. 617 former DIN 82220.
Groove base diameter = 9x rope diameter. All dimensions in mm.

Nominal size **Outside diameter** Groove base diameter	**1** **135** 112	**2** **180** 150	**3** **220** 180	**4** **260** 216	**5** **290** 236	**6** **330** 270	**8** **365** 300	**10** **415** 340	**12** **455** 375
Groove radius	8	10	12	13	15	17	19	21	23
Groove depth	11	15	20	22	27	30	32	37	40
Rim width	25	31	39	45	51	57	64	71	79
Bore for axle	22	32	40	45	50	55	65	70	80
Hub length	27	34	42	48	54	60	67	75	83
Hub diameter	42	56	70	80	85	96	105	120	125
Rope diameter max.	14	18	22	24	28	32	36	40	44
Loading capacity in kg	2000	4000	6300	8000	10000	12500	16000	20000	25000
Weight in kg about	2,00	4,00	5,00	8,00	9,00	16,00	20,00	28,00	35,00

No. 615 Rope sheaves for wire ropes former DIN 82236

material steel, with self-lubricating bush.
Groove base diameter = 14x rope diameter.
All dimensions in mm.

Nominal size **Outside diameter** Groove base diameter	**1** **195** 170	**2** **260** 224	**3** **320** 280	**4** **380** 335	**5** **430** 375	**6** **460** 400	**8** **515** 450
Groove radius	7	9	11	13	14	15	17
Groove depth	12	18	20	22	27	30	32
Rim width	25	31	39	45	51	57	64
Bore for axle	22	32	40	45	50	55	65
Hub length	27	34	42	48	54	60	67
Hub diameter	55	70	85	90	100	110	120
Rope diameter max.	12	16	20	24	26	28	32
Loading capacity in kg	2000	4000	6300	8000	10000	12500	16000
Weight in kg about	3,00	5,00	9,00	13,00	21,00	25,00	35,00

No. 900 Wire rope pulleys

made of black polyamide PA 6G with integrated ball bearings, galvanized screws and nuts.
All dimensions in mm.

Outside diameter Groove base diameter	**50** 37	**60** 46	**70** 56	**80** 65	**100** 83	**120** 100
Groove radius	1,6	1,6	1,6	2,2	2,2	2,7
Groove depth	6,5	7	7	7,5	8,5	10
Rim width	13	13	16	18	18	18
Bore for axle	6	6	8	8	10	12
Hub length	19	19	26	26	30	30
Rope diameter max.	3	3	3	4	4	5
Type of bearing	6001-ZZ	6001-ZZ	6002-ZZ	6002-ZZ	6003-ZZ	6004-ZZ
Screw dimensions	M6 x 35	M6 x 35	M8 x 45	M8 x 45	M10 x 55	M12 x 60
Loading capacity in kg	100	100	200	200	300	400
Weight in kg about	0,07	0,09	0,14	0,16	0,26	0,40

Outside diameter Groove base diameter	**150** 130	**180** 160	**210** 185	**240** 206	**300** 265
Groove radius	3,5	4,2	4,8	5,3	6,5
Groove depth	10	10	12,5	17	17,5
Rim width	22	22	26	28	30
Bore for axle	14	14	16	16	16
Hub length	34	34	38	38	38
Rope diameter max.	6,5	8	9	10	12
Type of bearing	6004-ZZ	6004-ZZ	6005-ZZ	6005-ZZ	6005-ZZ
Screw dimensions	M14 x 65	M14 x 65	M16 x 70	M16 x 70	M16 x 70
Loading capacity in kg	500	500	800	800	1000
Weight in kg about	0,63	0,81	1,20	1,70	2,40

Rope pulleys
made of polyamide

No. 903 Rope pulleys made of polyamide

with integrated precision ball bearing.
All dimensions in mm.

Outside diameter Groove base diameter	**40** 30	**50** 38	**65/1** 53	**65/2** 55	**71** 62	**78/1** 56
Groove radius	2,5	2	2,5	4	2,2	4
Groove depth	5	6	6	5	4,5	11
Rim width	13	13	13	12	12,5	15
Bore for axle	8	10	10	10	10	10
Hub length	13	13	13	12	12,5	15
Rope diameter max.	5	4	5	8	4	8
Type of bearing	608-ZZ	6000-ZZ	6000-ZZ	6000-ZZ	6000-ZZ	6000-ZZ
Loading capacity in kg	50	50	81	140	100	138
Weight in kg about	0,02	0,03	0,04	0,05	0,06	0,06

Outside diameter Groove base diameter	**78/2** 66	**80/1** 68	**80/2** 50	**98** 80	**134** 116
Groove radius	6	2	4	3	2,6
Groove depth	6	6	15	9	9
Rim width	19	12	21	20	15
Bore for axle	15	10	15	10	12
Hub length	19	12	21	20	15
Rope diameter max.	11	4	8	6	5
Type of bearing	6202-ZZ	6000-ZZ	6202-ZZ	2 x 6000-ZZ	6201-ZZ
Loading capacity in kg	245	85	225	150	145
Weight in kg about	0,09	0,06	0,10	0,12	0,17

Ball bearing pulleys

made of steel

No. 1209 Ball bearing pulley made of steel

hardened, with bicycle type ball bearing.
All dimensions in mm.

Outside diameter Groove base diameter	**30** 24	**40** 33	**50** 43	**60** 53	**80** 70
Groove radius	3	3,5	3,5	3,5	5
Groove depth	3	3,5	3,5	3,5	5
Rim width	10	11	11	11	13
Bore for axle	7,1	8,1	8,1	8,1	10,2
Hub length	12	12	12	12	16
Rope diameter max.	6	7	7	7	10
Loading capacity in kg	65	85	85	85	130
Weight in kg about	0,04	0,08	0,13	0,21	0,42

No. 1210 Rope pulleys made of steel

galvanized, with precision ball bearing.
All dimensions in mm.

Outside diameter Groove base diameter	**75** 65	**100** 87	**120** 102	**134** 116	**150** 132
Groove radius	2	3,25	3	2,5	5
Groove depth	5	6,5	9	9	9
Rim width	13	26	23,5	20	27
Bore for axle	12	30	15	15	25
Hub length	13	26	26	20	27
Rope diameter max.	4	6	6	5	9
Type of bearing	6201-ZZ	6006-ZZ	2 x 6202-ZZ	6302-2RS	6205-ZZ
Loading capacity in kg	85	155	205	195	450
Weight in kg about	0,55	1,55	1,76	1,88	2,98

Rope pulleys
made of stainless steel

No. 1300 Rope pulleys made of stainless steel

material 1.4305, groove machined, with maintenance-free plastic bush (bore with E10 tolerance).
All dimensions in mm.

Outside diameter Groove base diameter	**50** 38	**75** 59	**100** 80	**125** 100	**150** 120	**200** 166
Groove radius	2,7	3,7	4,8	6	7	8
Groove depth	6	8	10	12	15	17
Rim width	12	18	22	22	27	28
Bore for axle	10	12	16	16	20	30
Hub length	14	20	24	24	30	32
Hub diameter	18	20	24	24	28	42
Rope diameter max.	5	7	9	11	13	15
Loading capacity in kg	100	200	300	500	750	1500
Weight in kg about	0,20	0,65	1,40	2,10	3,75	6,90

No. 1302 Rope pulleys made of stainless steel

material 1.4301, groove machined, with self-lubricating bush.
All dimensions in mm.

Outside diameter Groove base diameter	**50** 38	**75** 60	**100** 80	**150** 126
Groove radius	4	5	6	8
Groove depth	6	7,5	10	12
Rim width	12	18	21	24
Bore for axle	10	12	15	20
Hub length	15	20	25	25
Hub diameter	29	36	42	56
Rope diameter max.	6	8	9	12
Loading capacity in kg	100	200	300	750
Weight in kg about	0,10	0,30	0,60	1,40

No. 1304 Rope pulleys made of stainless steel

material 1.4301, groove machined, with sealed ball bearings.
All dimensions in mm.

Outside diameter Groove base diameter	**50** 38	**75** 60	**100** 80	**150** 126
Groove radius	4	5	6	8
Groove depth	6	7,5	10	12
Rim width	12	18	21	24
Bore for axle	10	12	15	20
Hub length	15	20	25	25
Hub diameter	29	36	42	56
Rope diameter max.	6	8	9	12
Type of bearing	6000-2RS1	6001-2RS1	6002-2RS1	6004-2RS1
Loading capacity in kg	100	200	300	750
Weight in kg about	0,10	0,30	0,60	1,40

Manila rope pulleys

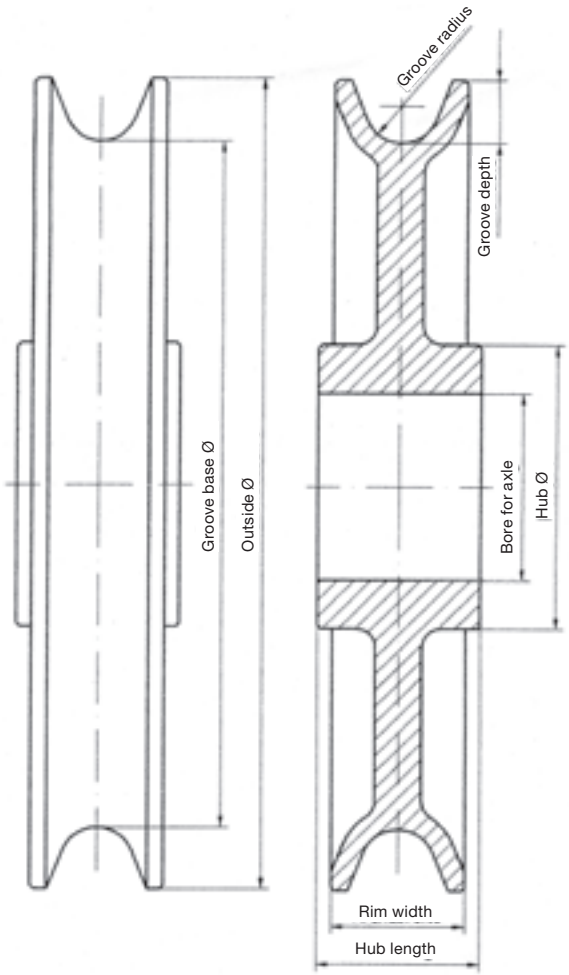

For all rope sheaves:

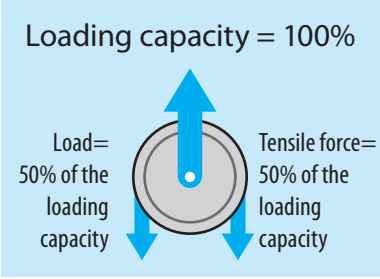

Manila rope pulleys

made of cast iron

No. 16 h Manila rope pulleys made of cast iron

groove machined, hub bored, anti-rust coating, fitting our manila rope blocks. If required also with red bronze bush (design „R“) or roller bearing (design „W“).
All dimensions in mm.

Outside diameter Groove base diameter	**60** 50	**75** 65	**90** 78	**100** 84	**120** 102	**130** 110	**150** 128	**175** 149	**200** 172	**230** 194
Groove radius	5,5	5,5	7	8,5	10	12	14	17,5	20,5	23,5
Groove depth	5	5	6	8	9	10	11	13	14	18
Rim width	15	15	19	22	27	30	33	41	46	55
Bore for axle	11	12	14	14	19	22	25	27	30	35
Hub length	16	16	20	24	30	32	35	43	52	61
Hub diameter	21	32	35	35	35	39	41	51	57	70
Rope diameter max.	10	10	13	16	19	22	26	32	38	44
Loading capacity in kg	75	100	150	250	500	500	1000	1500	2000	3000
Weight in kg about	0,15	0,22	0,32	0,45	0,80	1,00	1,40	2,20	3,30	4,70

No. 19 Light rope pulleys made of cast iron

groove machined, hub bored, with curved spokes, fitting gin blocks for manila rope No. 17 and No. 18.
All dimensions in mm.

Outside diameter Groove base diameter	**120** 82	**140** 98	**160** 116	**190** 144	**220** 174	**250** 202	**300** 244
Groove radius	12	13	13	14,5	14,5	15	16
Groove depth	19	21	22	23	23	24	28
Rim width	35	38	38	43	43	43	47
Bore for axle	13	13	13	16	16	16	16
Hub length	42	45	46	52	52	52	52
Hub diameter	33	33	35	38	40	40	50
Rope diameter max.	22	25	25	28	28	29	30
Loading capacity in kg	150	150	200	200	250	250	300
Weight in kg about	0,70	1,00	1,35	1,90	2,40	2,80	4,20

Cord pulleys

made of brass

No. 25 a Cord pulleys made of brass

with narrow, round groove, groove machined, hub bored,
All dimensions in mm.

Outside diameter Groove base diameter	**16** 10	**20** 14	**25** 18	**30** 22
Groove radius	1,5	1,75	2	2,5
Groove depth	3	3	3,5	4
Rim width	6	6	7	7
Bore for axle	3	3	3	3
Hub length	6	6	7	8
Hub diameter	-	-	-	10
Rope diameter max.	2,5	3	3,5	4,5
Loading capacity in kg	30	30	30	30
Weight in kg about	0,007	0,012	0,021	0,020

No. 25 b Cord pulleys made of brass

with wide, round groove, groove machined, hub bored.
All dimensions in mm.

Outside diameter Groove base diameter	**24** 16	**30** 22	**35** 25	**40** 30
Groove radius	2,5	3	4,5	4,1
Groove depth	4	4	5	5
Rim width	9	10	12	12
Bore for axle	4,5	4,5	4,5	4,5
Hub length	9	10	12	12
Hub diameter	8	9	10	10
Rope diameter max.	4,5	5,5	8,5	8
Loading capacity in kg	40	40	40	40
Weight in kg about	0,020	0,030	0,047	0,070

Rope pulleys

made of stainless steel

No. 96 Rope pulleys made of stainless steel

material 1.4104, with red bronze bush, fitting stainless steel manila rope blocks No. 91 - 95.
All dimensions in mm.

Outside diameter Groove base diameter	**25** 17	**32** 21	**50** 34	**75** 60	**100** 80	**125** 103
Groove radius	6	6	7,5	7	9	10
Groove depth	5	5	8	7	10	10
Rim width	16	16	20	20	25	25
Bore for axle	8	8	10	13	17	17
Hub length	17	17	21	21	26	28
Hub diameter	16	16	23	30	35	35
Rope diameter max.	10	10	14	14	16	17
Loading capacity in kg	150	150	250	500	750	1000
Weight in kg about	0,04	0,06	0,16	0,28	0,56	0,59

Cord pulleys

made of cast iron

No. 150 Cord pulleys made of cast iron

with narrow, round groove, groove machined, hub bored. Size 25 mm is made of steel.
All dimensions in mm.

Outside diameter Groove base diameter	**25** 19	**30** 24	**40** 32	**50** 42	**60** 48	**70** 58	**80** 66	**90** 76	**100** 86	**120** 104
Groove radius	2,5	3	3,5	3,5	4,5	4,5	4,5	5,5	5,5	6
Groove depth	3	3	4	4	6	6	7	7	7	8
Rim width	10	10	11	12	12	16	14	16	16	19
Bore for axle	4	4	4	5	5	6	6	6	6	6
Hub length	11	10	11	13	13	16	14	16	16	19
Hub diameter	10	9	12	13	14	16	17	17	18	25
Rope diameter max.	4	5	6	6	8	8	8	10	10	11
Loading capacity in kg	15	15	15	22	22	25	25	30	30	35
Weight in kg about	0,032	0,026	0,038	0,084	0,097	0,167	0,228	0,280	0,232	0,572

No. 151 Rope or cord pulleys made of cast iron

with wide, round groove, groove machined, hub bored.
All dimensions in mm.

Outside diameter Groove base diameter	**30** 22	**40** 30	**50** 36	**60** 44	**70** 52	**80** 60	**90** 68	**100** 76	**120** 90
Groove radius	4	4,5	5,5	6	7	7	8	9	10
Groove depth	4	5	7	8	9	10	11	12	15
Rim width	11	13	17	17	20	21	21	24	27
Bore for axle	4	5	5	6	8,5	10	11	12	12
Hub length	11,5	14	18	21	22	24	24	27	33
Hub diameter	12	12	13	15	19	20	20	24	24
Rope diameter max.	7	8	10	11	13	13	15	17	19
Loading capacity in kg	15	25	30	40	50	80	100	110	140
Weight in kg about	0,025	0,045	0,087	0,143	0,212	0,300	0,315	0,412	0,638

No. 170 Rope pulleys made of aluminium

with red bronze bush, fitting pulleys No. 442 and No. 443.
All dimensions in mm.

Outside diameter Groove base diameter	**115** 89	**200** 152
Groove radius	9,5	15
Groove depth	13	24
Rim width	26	42
Bore for axle	14	19
Hub length	30	44
Hub diameter	32	42
Rope diameter max.	16	29
Loading capacity in kg	150	250
Weight in kg about	0,30	1,10

Please specify in order:

ER = steel (30 - 60 mm) or cast iron (75 - 100 mm)

MR = brass (30 - 60 mm)

No. 427 Manila rope pulleys

groove machined, hub bored, fitting tackle blocks No. 420.
All dimensions in mm.

Outside diameter Groove base diameter	**30** 25	**40** 33	**50** 42	**60** 52	**75** 65	**90** 78	**100** 84
Groove radius	4	4	4,5	4,5	5,5	7	8,5
Groove depth	2,5	3,5	4	4	5	6	8
Rim width	9,5	9,5	11,5	11,5	15	19	22
Bore for axle	8,25	8,25	10,25	10,25	12,25	14,25	14,25
Hub length	10	10	11,5	11,5	16	20	24
Hub diameter	14	14	16	16	32	35	35
Rope diameter max.	6	6	8	9	11	13	16
Loading capacity in kg	50	50	70	80	100	150	250
Weight in kg about	0,035	0,053	0,090	0,140	0,220	0,320	0,450

No. 901 Rope pulleys made of polyamide

All dimensions in mm.

Outside diameter Groove base diameter	**15** 9	**20** 12	**25** 17	**30** 18	**40/1** 27	**40/2** 32
Groove radius	3	3	3,5	4	4,5	4
Groove depth	3	4	4	6	6	4
Rim width	9	10	12	14	13	12
Bore for axle	4	4	4	6	7	6
Hub length	9	10	12	14	13	15
Hub diameter	-	-	-	12	15	15
Rope diameter max.	6	6	7	8	8	8
Loading capacity in kg	15	16	18	20	23	35
Weight in kg about	0,002	0,003	0,005	0,006	0,009	0,007

Outside diameter Groove base diameter	**48** 40	**50/1** 32	**50/2** 40	**53** 25	**58** 38	**60/1** 38
Groove radius	4	6	2	7,5	7	10
Groove depth	4	9	5	14	10	11
Rim width	12	16	10	24	19	30
Bore for axle	8	7	15	10	8	12
Hub length	15	16	11	25	20	18
Hub diameter	17	16	25	25	18	-
Rope diameter max.	8	11	4	14	13	19
Loading capacity in kg	42	28	30	60	30	90
Weight in kg about	0,011	0,019	0,017	0,029	0,029	0,044

Outside diameter Groove base diameter	**60/2** 52	**60/3** 38	**65/1** 43	**65/2** 57	**67** 49	**73** 65
Groove radius	4,5	10	8	4	3	4
Groove depth	4	11	11	4	9	4
Rim width	20	30	21	12	12	13
Bore for axle	8	10	9	8	10	10
Hub length	27	32	22	15	13,5	17
Hub diameter	20	28	21	17	19	20
Rope diameter max.	9	19	15	8	6	8
Loading capacity in kg	50	90	32	50	50	55
Weight in kg about	0,040	0,050	0,040	0,020	0,020	0,040

Rope pulleys
made of polyamide

No. 901 Rope pulleys made of polyamide

All dimensions in mm.

Outside diameter Groove base diameter	**75** 51	**76** 66	**78** 70	**80** 62	**100/1** 84	**100/2** 76
Groove radius	8,5	5	4	6	2	8
Groove depth	12	5	4	9	8	12
Rim width	24	16	12	21	12	25
Bore for axle	10	11	10	12	10	15
Hub length	24	17	14	25	17	27
Hub diameter	22	20	17	30	30	38
Rope diameter max.	16	10	8	12	3	16
Loading capacity in kg	35	90	60	140	85	210
Weight in kg about	0,070	0,050	0,040	0,080	0,080	0,130

Outside diameter Groove base diameter	**100/3** 68	**100/4** 90	**120/1** 88	**120/2** 114	**120/4** 88	**126** 102
Groove radius	14	5	9	2,5	6	7,5
Groove depth	16	5	16	3	15	12
Rim width	42	16	27	25	22	35
Bore for axle	20	14	15	20	20	30
Hub length	27	28	33	30	27	42
Hub diameter	–	30	40	45	50	70
Rope diameter max.	27	10	17	5	12	14
Loading capacity in kg	270	100	300	100	240	500
Weight in kg about	0,205	0,100	0,190	0,240	0,230	0,420

Outside diameter Groove base diameter	**130** 110	**150/1** 110	**150/2** 136	**152** 132	**174** 150	**205** 171
Groove radius	3,5	12,5	8	3	18	5
Groove depth	10	20	7	10	12	17
Rim width	17	34	32	28	45	29
Bore for axle	15	20	25	18	15	20
Hub length	30	42	42	30	45	39
Hub diameter	30	46	60	45	55	60
Rope diameter max.	6	24	15	6	34	10
Loading capacity in kg	150	410	450	220	250	300
Weight in kg about	0,200	0,340	0,400	0,410	0,490	0,560

Gin blocks

Product								Page
Gin block No. 17								3.02
Gin block No. 18								3.02
Gin block No. 22								3.06
Pulley No. 442 with suspension hook								3.08
Pulley No. 443 with lifting hook								3.08

Gin blocks for manila rope

Gin blocks for manila rope

No. 17 Gin blocks for manila rope

with steel case and lifting hook with safety catch, black lacquered (KTL).
With rope pulleys No. 19 made of cast iron, hub bored, groove not machined.
All dimensions in mm.

Pulley outside diameter Groove base diameter	**120** 82	**140** 98	**160** 116	**190** 144	**220** 174	**250** 202	**300** 244
Axial length	75	75	75	90	90	90	90
Overall length	230	245	272	320	350	380	430
Hook opening width	25	25	25	25	25	25	25
Rope diameter max.	22	25	25	28	28	29	30
Loading capacity in kg	150	150	200	200	250	250	300
Weight in kg about	1,35	1,65	1,90	3,15	4,00	3,80	5,40

No. 18 Gin blocks for manila rope

with steel case and lifting hook with safety catch, black lacquered (KTL).
With rope pulleys No. 19 made of cast iron, hub bored, groove not machined.
All dimensions in mm.

Pulley outside diameter Groove base diameter	**120** 82	**140** 98	**160** 116	**190** 144	**220** 174	**250** 202	**300** 244
Axial length	75	75	75	90	90	90	90
Overall length	230	245	272	320	350	380	430
Total width	170	190	210	250	280	320	350
Hook opening width	25	25	25	25	25	25	25
Rope diameter max.	22	25	25	28	28	29	30
Loading capacity in kg	150	150	200	200	250	250	300
Weight in kg about	1,45	1,75	2,05	3,50	4,40	4,30	5,90

Spare pulleys

for gin blocks for manila rope No. 17 and No. 18

No. 19 Rope pulleys made of cast iron

groove not machined, hub bored, with curved spokes, fitting gin blocks for manila rope No. 17 and No. 18.
All dimensions in mm.

Outside diameter Groove base diameter	**120** 82	**140** 98	**160** 116	**190** 144	**220** 174	**250** 202	**300** 244
Groove radius	12	13	13	14,5	14,5	15	16
Groove depth	19	21	22	23	23	24	28
Rim width	35	38	38	43	43	43	47
Bore for axle	13	13	13	16	16	16	16
Hub length	42	45	46	52	52	52	52
Hub diameter	33	33	35	38	40	40	50
Rope diameter max.	22	25	25	28	28	29	30
Loading capacity in kg	150	150	200	200	250	250	300
Weight in kg about	0,70	1,00	1,35	1,90	2,40	2,80	4,20

Heavy gin blocks

for wire rope

No. 22 Heavy gin blocks for wire rope

with steel case and lifting hook former DIN 688 with safety catch, grayish-blue. With rope pulley No. 23 made of cast iron, hub bored, groove machined. If required also with swivel oval eye (order No. 22 ö) or with roller bearing (design „W“). All dimensions in mm.

Pulley outside diameter Groove base diameter	**115** 89	**155** 129	**185** 149	**220** 184	**260** 222	**310** 250
Axial length	55	62	73	73	80	100
Overall length	300	350	410	460	520	640
Total width	150	192	225	260	280	400
Hook opening width	30	37	37	40	40	55
Rope diameter max.	10	10	16	16	18	26
Loading capacity in kg	500	1000	1500	2000	3000	5000
Weight in kg about	2,50	3,50	6,00	7,50	11,00	24,00

Spare pulleys **fitting gin blocks No. 22**

No. 23 Wire rope pulleys made of cast iron

groove machined, hub bored, fitting gin blocks No. 22 and wire rope guide pulleys No. 829. If required also with red bronze bush (design „R“) or roller bearing (design „W“).
All dimensions in mm.

Outside diameter Groove base diameter	**115** 89	**155** 129	**220** 184	**260** 222	**310** 250
Groove radius	5,5	5,5	8,5	9,5	14
Groove depth	13	13	18	19	30
Rim width	24	27	32	40	52
Bore for axle	14	19	22	25	35
Hub length	26	28	35	43	56
Hub diameter	36	48	54	65	85
Rope diameter max.	10	10	16	18	26
Loading capacity in kg	500	1000	2000	3000	5000
Weight in kg about	0,90	1,40	3,30	5,20	10,00

Pulleys

No. 442 Pulleys

with fixed suspension hook.
All dimensions in mm.

Pulley outside diameter Groove base diameter	**115** 89	**200** 152
Axial length	48	60
Overall length	245	355
Opening width	38	42
Rope diameter max.	16	29
for cable up to mm²	150	500
Loading capacity in kg	150	250
Weight in kg about	0,90	2,20

No. 443 Pulleys

with lifting hook No. 511 former DIN 688 with safety catch. If required also with swivel oval eye (order No. 443 ö).
All dimensions in mm.

Pulley outside diameter Groove base diameter	**115** 89	**200** 152
Axial length	48	60
Overall length	255	380
Opening width	18	20
Rope diameter max.	16	29
for cable up to mm²	150	500
Loading capacity in kg	150	250
Weight in kg about	1,15	2,70

Spare Pulleys

for pulleys No. 442 and No. 443

No. 170 Rope pulleys made of aluminium

with red bronze bush.
All dimensions in mm.

Outside diameter Groove base diameter	**115** 89	**200** 152
Groove radius	9,5	15
Groove depth	13	24
Rim width	26	42
Bore for axle	14	19
Hub length	30	44
Hub diameter	32	42
Rope diameter max.	16	29
for cable up to mm^2	150	500
Loading capacity in kg	150	250
Weight in kg about	0,30	1,10

Sliding door pulleys

Folding door pulleys

Product								Page
Sliding door pulley No. 102 with cast iron pulley and roller bearing								4.02
Sliding door pulley No. 104 with cast iron pulley and roller bearing								4.04
Sliding door pulley No. 105 with cast iron pulley and ball bearing								4.05
Sliding door pulley No. 630 with ball bearing								4.06
Sliding door pulley No. 751 with cast iron pulley and ball bearing								4.08
Sliding door pulley No. 1603 with steel pulley and ball bearing								4.09
Folding door pulley No. 750 with steel pulley and ball bearing								4.12
Ball thrust bearing No. 801 fitting folding door pulleys								4.13
Sliding door pulley No. 1390 made of stainless steel								4.14
Pulley No. 1398 made of stainless steel								4.14

Sliding door pulleys

04

Sliding door pulleys
with roller bearing

No. 102 Sliding door pulleys with roller bearing

body made of galvanized steel. With pulleys No. 218 made of cast iron.
All dimensions in mm.

D	60	75	90	105	120	140	160
a	6	9	9	11	11	14	14
b	8	11	11	13	13	17	17
c	6	8	9	10	10	10	10
d	68	81	99	110	128	155	172
e	11,5	15	16	18	20	22	22
f	50	54	60	67	73	83	83
g	265	315	400	465	535	600	615
h	25	32	35	40	45	50	55
k	5	6	6	8	8	10	10
m	5	8	8	10	10	13	13
n max.	25	45	45	50	50	65	65
o	31	42	46	51	56	67	67
p	34	52	54	72	72	88	88
u	6,1	8,5	10,5	10,5	10,5	10,5	10,5
Loading capacity per piece in kg	30	35	50	75	100	135	175
Weight in kg about	0,56	0,95	1,50	2,15	2,64	3,93	4,80

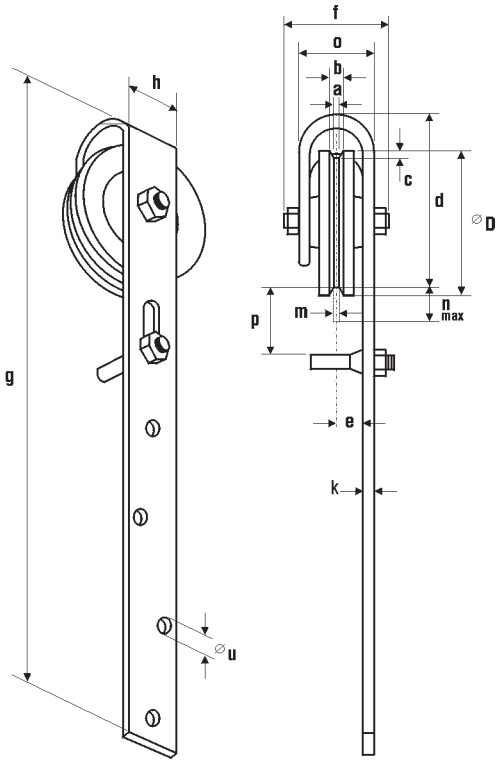

Spare pulleys

fitting sliding door pulleys No. 102

No. 218 Roller bearing pulleys

made of cast iron, with roller bearing, bolt and two nuts, fitting sliding door pulleys No. 102.
All dimensions in mm.

D	60	75	90	105	120	140	160
K	8	9	9	12	12	12	16
a	6	9	9	11	11	14	14
b	8	11	11	13	13	17	17
c	6	8	9	10	10	10	10
d	48	59	72	85	100	120	140
e	16	19	19	21	22	26	27
f	20	27	27	32	32	34	34
g	50	55	55	70	70	85	85
h	10	10	10	12	12	16	16
i	6,5	5	5	6	6	13	13
m	5	8	8	10	10	13	13
n	24	27	27	35	35	40	48
Size of thread M	M 8	Ww 3/8"	Ww 3/8"	M 12	M 12	M 12	M 16
Loading capacity per piece in kg	30	35	50	75	100	135	175
Weight in kg about	0,20	0,37	0,53	0,71	0,89	1,41	1,56

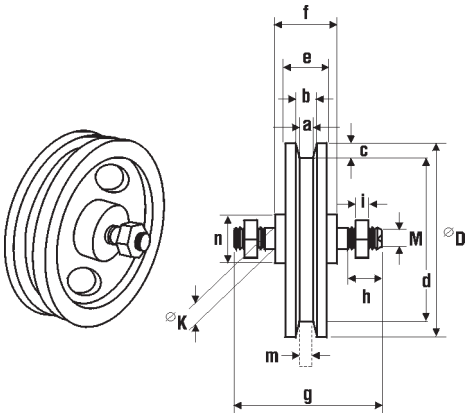

Sliding door pulleys
with roller bearing

No. 104 Sliding door pulleys with low overall height

body made of galvanized steel. With pulleys made of steel with roller bearing basket, weathering protected.
All dimensions in mm.

Nominal size D	**2** 60	**3** 60
a	13	13
b	15	15
c	6	6
d	73	73
e	19	19
f	72	76
g	450	450
h	70	70
k	8	10
m	12	12
n max.	50	50
o	55	60
p	68	65
u	10,5	10,5
Loading capacity per piece in kg	80	100
Weight in kg about	3,00	3,60

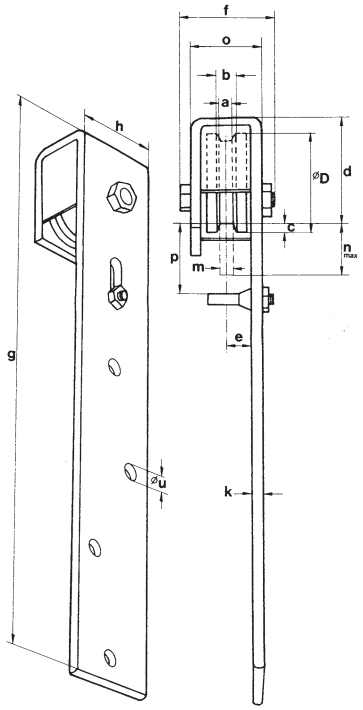

No. 105 Sliding door pulleys with low overall height

body made of galvanized steel. With pulleys made of steel, precision ball bearing, weathering protected.
All dimensions in mm.

Nominal size D	**2** 60	**3** 60
a	13	13
b	15	15
c	6	6
d	72	72
e	19	19
f	70	75
g	450	450
h	70	70
k	8	10
m	12	12
n max.	50	50
o	55	60
p	68	65
u	10,5	10,5
Loading capacity per piece in kg	180	300
Weight in kg about	2,90	3,50

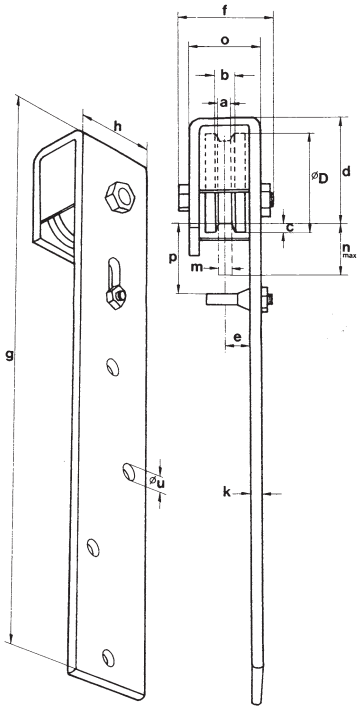

Sliding door pulleys
to weld on

No. 630 Sliding door pulleys to weld on

for manually operated steel doors, body made of galvanized steel. With pulley No. 1040 made of cast iron and size 160 with pulley No. 1400 made of steel, with precision ball bearing, for smooth operation of low noise.
All dimensions in mm.

D	150	160
a	14	14
b	17	17
c	10	10
d	155	170
e	17,5	17,5
f	60	72
g	400	500
h	70	70
k	10	15
m	13	13
Loading capacity per piece in kg	300	650
Weight in kg about	5,38	9,68

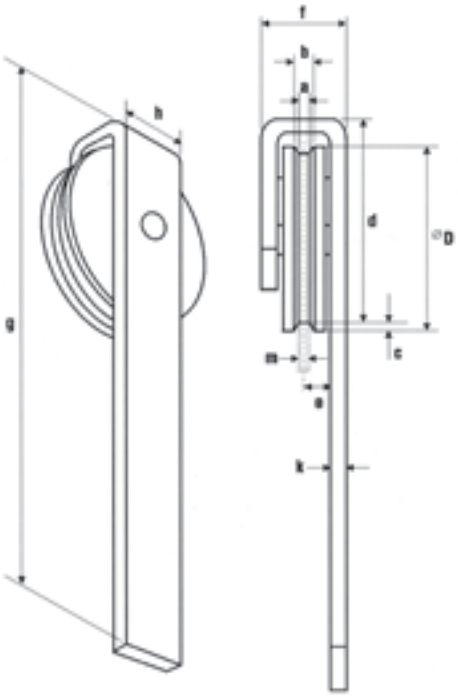

Pulleys

for sliding door pulley No. 630/160 mm

No. 1400 Pulleys with axle

for electric operated, bottom-pulley sliding doors, galvanized steel, precision ball bearing, axle made of bright-drawn steel with lubricating nipple. Outside diameter 160 mm fitting sliding door pulley No. 630.
All dimensions in mm.

D	100	120	140	160
K	15	15	20	20
a	14	14	14	14
b	17	17	17	17
c	10	10	10	10
e	28	30	30	32
f	32	35	35	40
g	80	85	90	95
h	16	16	17	17
i	8	8	9	9
m	13	13	13	13
Size of thread M	M 14	M 14	M 20	M 20
Loading capacity in kg	200	270	400	500
Weight in kg about	1,42	2,28	3,24	4,59

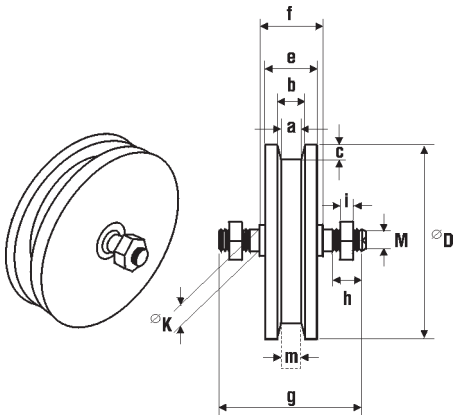

Sliding door pulleys
to weld on

No. 751 Sliding door pulleys to weld on

for manually operated steel doors, body made of galvanized steel. With pulley made of hardened special steel, bicycle type ball bearings, dust and water protected, for smooth operation of low noise. All dimensions in mm.

Nominal size D	**1** 35	**2** 45	**3** 45	**4** 39
b	9	13	13	13
c	3,5	2,5	2,5	2
d1	45	54	59	53
d2	51	63	68	68
e	9,5	11	11	9,5
f	39	42	52	54
g	300	300	300	300
h	50	70	70	80
k	10	10	15	16
m	8	12	12	12
Loading capacity per piece in kg	120	350	500	720
Weight in kg about	1,48	2,31	3,36	4,03

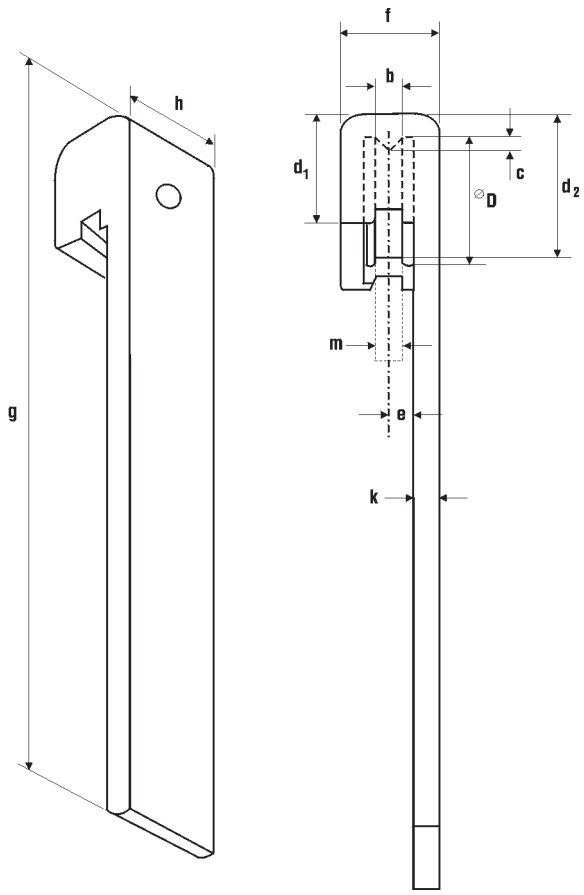

Sliding door pulleys
to weld on

No. 1603 Sliding door pulleys to weld on

for manually operated steel doors, body made of galvanized steel. With pulleys made of steel, precision ball bearing, weathering protected, for smooth operation of low noise.
All dimensions in mm.

Nominal size D	**2** 60	**4** 60	**6** 60	**8** 60	**10** 60	**12** 60
a	13	13	13	13	13	13
b	15	15	15	15	15	15
c	6	6	6	6	6	6
d	74	74	74	71	71	71
e	19	19	19	19	19	19
f	71	71	71	76	76	76
g	250	350	450	250	350	450
h	70	70	70	70	70	70
k	8	8	8	10	10	10
m	12	12	12	12	12	12
n	50	50	50	50	50	50
o	54,5	54,5	54,5	59	59	59
Loading capacity per piece in kg	210	210	210	300	300	300
Weight in kg about	2,05	2,48	2,92	2,50	3,00	3,55

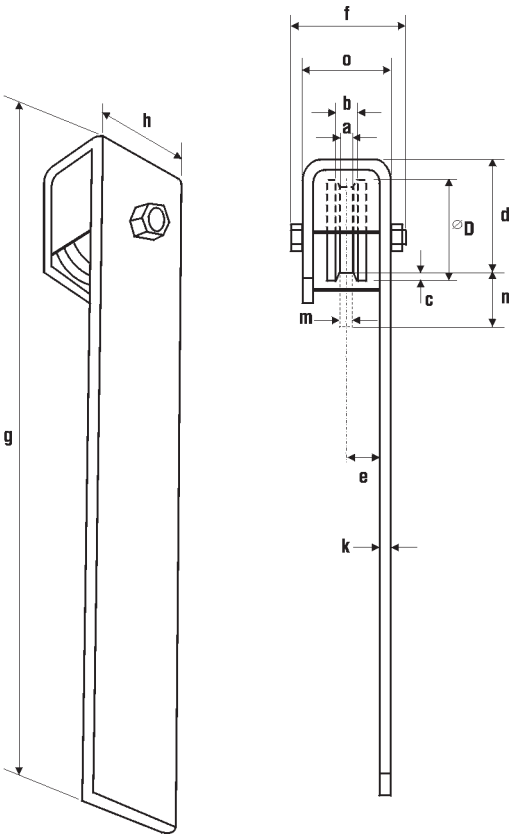

Folding door pulleys

for manually operated steel doors

Folding door pulleys

No. 750 Folding door pulleys for manually operated steel doors

ball thrust bearing over nut, body made of steel with welded spindle made of bright-drawn steel, galvanized. With pulleys made of hardened special steel, bicycle ball bearing or size 1 and 8 with two precision ball bearings, dust and water protected, for smooth operation with low noise. All dimensions in mm.

Nominal size	**1**	**2**	**3**	**4**	**5**	**6**	**7**	**8**
D	35	45	45	45	45	45	45	39
G	16	16	20	22	23	23	26	23
a	9	13	13	13	13	13	13	13
c	3,5	2,5	2,5	2,5	2,5	2,5	2,5	2
d	45	54	54	54	54	54	58	53
d1	50	62	62	62	62	62	67	62
e	9,5	11	11	11	11	11	11	9,5
f	38	42	42	42	42	42	52	53
g	314	380	380	380	380	340	390	380
h	50	70	70	70	70	70	70	80
i	16,5	16,5	19,5	22	22	22	27	22
k	10	10	10	10	10	10	15	16
l	28	47	47	47	47	47	35	50
m	8	10	10	10	10	10	10	12
n max.	35	40	40	40	40	40	45	35
o	65	77,5	76,5	77,5	76,5	78,5	79,5	72,5
q	205	250	250	250	250	210	250	250
s	65	65	65	65	65	65	65	70
t	12	12	13	15	15	15,5	15,5	15,5
u	38	38	38	38	38	38	48	40
w	106	130	130	130	130	130	140	130
Size of thread M	M 16	M 16	M 20	M 22	M 22	M 22	M 27	M 22
Loading capacity per piece in kg	120	200	250	350	350	350	500	700
Weight in kg about	1,11	1,73	1,98	2,21	2,26	2,14	3,27	2,87

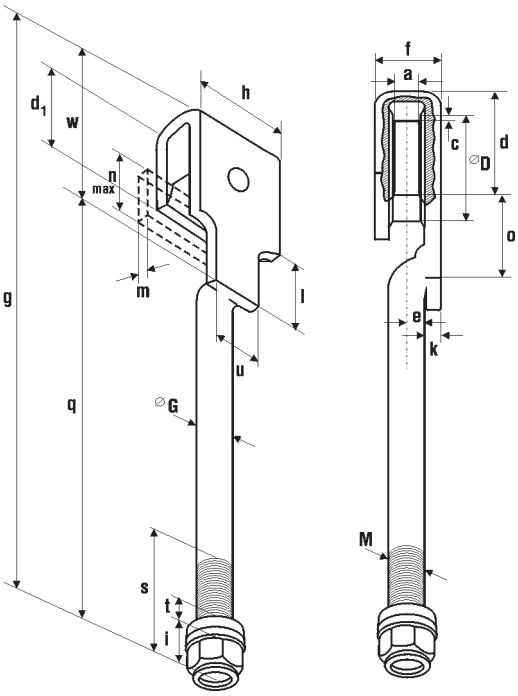

No. 801 Ball thrust bearings made of steel

hardened, galvanized steel jacket, fitting folding door pulleys No. 750.
All dimensions in mm.

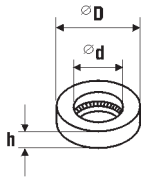

Nominal size D	**16** 27	**20** 33	**23** 44
d	16	20	23
h	9	10	12
Weight in kg about	0,02	0,03	0,07
Fitting No. 750 Nominal size	1/2	3	4/5/6/8

Please specify in order:
A = body untreated
B = body brushed

No. 1390 Sliding door pulleys made of stainless steel

body made of stainless steel, fitting pulleys No. 1398 made of stainless steel with ball bearings. All dimensions in mm.

D	75	90
a	9	9
b	11	11
c	8	8
d	81	99
e	14	16
f	60	70
g	315	400
h	30	40
k	6	6
m	8	8
n max.	45	45
o	40	45
p	52	54
u	8,4	10,4
Loading capacity per piece in kg	250	375
Weight in kg about	0,95	1,50

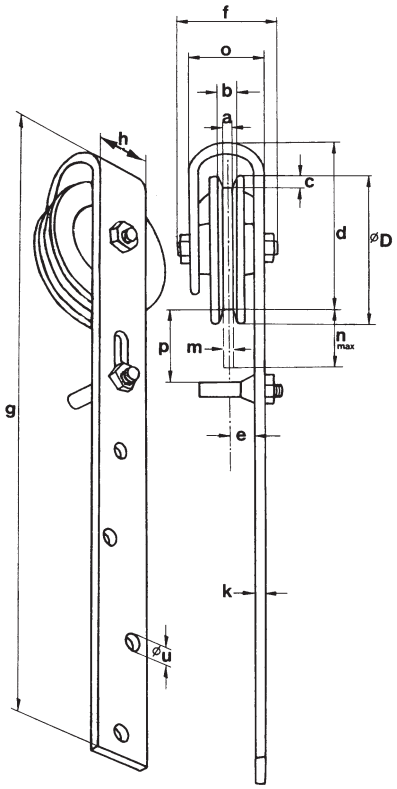

Fittings Sliding door pulleys

made of stainless steel No. 1390

No. 1398 Pulleys made of stainless steel

turned, with precision ball bearings and edged groove, axle made of stainless steel with two nuts, fitting sliding door pulleys No. 1390. All dimensions in mm.

D	75	90
K	10	10
a	9	9
b	11	11
c	8	8
e	19	20
f	28	32
h	10	10
i	6	6
m	8	8
n	32	40
Size of thread M	M 10	M 10
Loading capacity per piece in kg	250	375
Weight in kg about	0,20	0,37

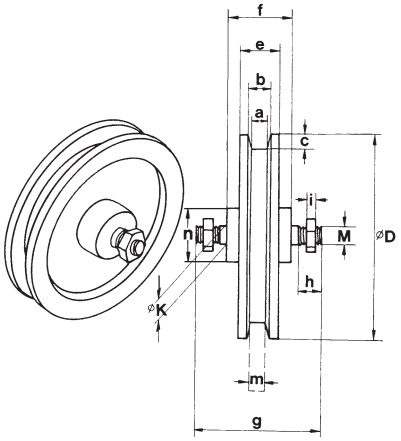

Guide sheaves

Trolley wheels

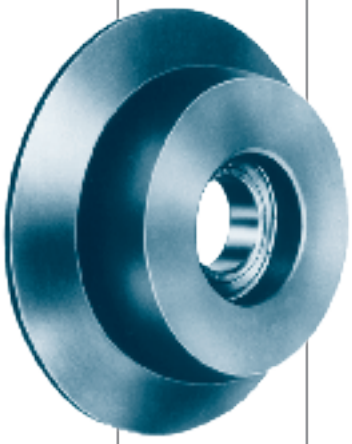

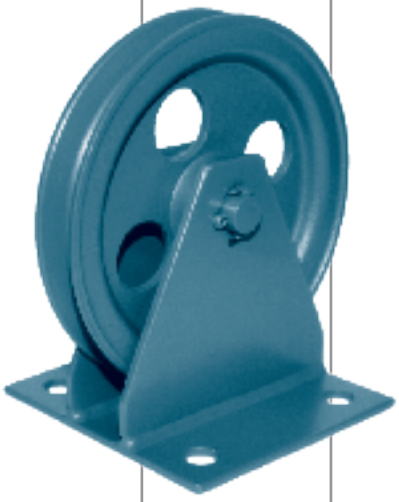

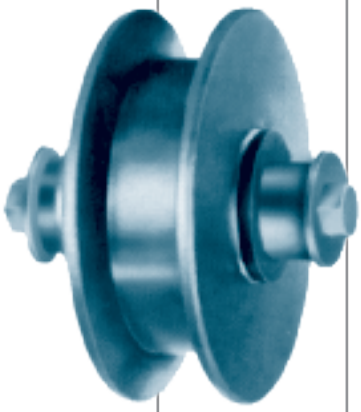

Product								Page
Pulley No. 103 acc. to DIN 20180								5.02
Pulley No. 148								5.02
Pulley No. 153								5.03
Pulley No. 154								5.03
Pulley No. 155								5.04
Pulley No. 156								5.04
Pulley No. 157								5.05
Pulley No. 158 a with wood screw								5.06
Pulley No. 158 b with becket								5.06
Pulley No. 158 d with thread screw								5.07
Pulley No. 158 e with wood screw and joint								5.07
Pulley No. 159 with hook								5.08
Pulley No. 160 with wood screw								5.08
Pulley No. 161								5.09
Pulley No. 162								5.10
Pulley No. 164								5.11

Product								Page
Pulley No. 166 with edge tread								5.11
Pulley No. 180								5.12
Pulley No. 186								5.13
Wire rope guide pulley No. 191 single sheave, hinged								5.14
Wire rope guide pulley No. 192 two sheaves, hinged								5.14
Roller bearing pulley No. 218								5.16
Roller bearing pulley No. 218 S robust design (Type A)								5.17
Roller bearing pulley No. 218 S robust design (Type B)								5.18
Guide sheave No. 594 polyamide								5.19
Guide sheave No. 595 steel								5.19
Guide sheave No. 597 steel								5.19
Wire rope guide pulley No. 829								5.20
Pulley No. 902 polyamide								5.21
Pulley No. 1040 with axle								5.22
Sheave No. 1041 with axle								5.22
Trolley wheel No. 1203 with ball bearing								5.23

Product								Page
Trolley wheel No. 1204								5.24
Ball bearing pulley No. 1207 with flat tread								5.25
Ball bearing pulley No. 1208 with crowned tread								5.25
Pulley No. 1306 stainless steel								5.26
Pulley No. 1308 stainless steel								5.26
Pulley No. 1398 stainless steel								5.27
Pulley No. 1400 with axle								5.28
Pulley No. 1410 with axle								5.28
Pulley No. 1980 S - 1986 S with axle								5.29

Guide sheaves and trolley wheels

05

No. 103 Pulleys

acc. to DIN 20180, rope pulley made of polyamide, with fastening screw M10 x 100 mm and washer.
All dimensions in mm.

Outside diameter Groove base diameter	**100** 74
Groove width	16
Groove depth	13
Rim width	25
Axle diameter	15
Axial length	39
Length of thread	30
Loading capacity in kg	150
Weight in kg about	0,52

No. 148 Pulleys

rope pulley made of polyamide with ball bearing, case galvanized steel.
All dimensions in mm.

Pulley outside diameter Groove base diameter	**50** 38	**60** 46	**80** 64	**100** 85
Groove radius	4	5	6	6
Groove depth	6	7	8	8
Rim width	10	13	13	14
Width of base plate	57	59	66	80
Length of base plate	35	35	40	60
Size of base plate	2	2	2,5	2,5
Diameter of screw hole at base	5	5	6,5	6,5
Distance between holes in axial direction	41	43	48	54*
Distance between holes in longitudinal direction	20	20	24	42
Overall height	56	66	88	107
Rope diameter max.	3	4	5	5
Loading capacity in kg	60	70	100	150
Weight in kg about	0,14	0,18	0,30	0,50

* Lochung um 6 mm versetzt

Please specify in order:

A = pulley made of cast iron, body, axle and wood screw galvanized steel. Size 20 - 30 mm diameter only with steel pulley

B = Pulley and body made of brass, wood screw made of steel (Only to deliver in size 20 mm diameter)

No. 153 Pulleys

All dimensions in mm.

Pulley outside diameter Groove base diameter	**20** 14	**25** 19	**30** 22	**40** 32	**50** 42	**60** 50	**70** 60	**80** 68	**100** 88
Groove width	4	5	6	6	6	8	8	8,5	8,5
Groove depth	3	3	4	4	4	5	5	6	6
Rim width	8	10	10	11,5	12	12	13	16	14
Axial length	20	20	20	21	27	27	27	30	30
Screw diameter	7,1	7,1	7,1	7,1	7,1	7,1	7,1	7,1	8
Length of screw	45	45	45	45	45	45	60	60	70
Length of thread	27	27	27	27	27	27	40	40	40
Overall length	89	79	81,5	96	113	118	138	158	178
Rope diameter max.	3	4	5	5	5	7	7	8	8
Loading capacity in kg	15	15	15	18	22	22	22	22	30
Weight in kg about	0,04	0,06	0,07	0,10	0,16	0,19	0,26	0,34	0,41

No. 154 Pulleys with roller bearing

Case galvanized steel, rope pulleys made of cast iron.
All dimensions in mm.

Pulley outside diameter Groove base diameter	**40** 32	**50** 40	**65** 55
Groove width	8	8	8
Groove depth	4	5	5
Rim width	10,5	12	12
Case width	49	49	49
Overall length	30	40	50
Diameter of screw-down hole	4,5	5	5
Distance between holes in axial direction	36	36	36
Distance between holes in longitudinal direction	19	20	38
Case height	49	62	79
Rope diameter max.	6	7	7
Loading capacity in kg	10	15	18
Weight in kg about	0,12	0,18	0,27

No. 155 Pulleys with roller bearing

Case galvanized steel, rope pulleys made of cast iron.
All dimensions in mm.

Pulley outside diameter Groove base diameter	**40** 32	**50** 40	**65** 55
Groove width	8	8	8
Groove depth	4	5	5
Rim width	10,5	12	12
Case width	30	30	50
Case depth	19	19	20
Diameter of screw-down hole	4	4	4
Hole spacing width	18	18	40
Hole spacing height	88	88	110
Overall length	105	105	132
Rope diameter max.	6	7	7
Loading capacity in kg	10	15	18
Weight in kg about	0,16	0,18	0,35

No. 156 Pulleys with plain bearing

Case galvanized steel, rope pulleys made of cast iron. Size 30 mm only with galvanized steel pulley.
All dimensions in mm.

Pulley outside diameter Groove base diameter	**30** 22	**40** 32	**50** 42	**60** 50
Groove width	6	6	6	8
Groove depth	4	4	4	5
Rim width	10	11,5	12	12
Case width	36,5	40	52	60
Case depth	16	16	17,5	18,5
Diameter of screw-down hole	4,5	5,1	5,1	5,1
Hole spacing	62	72	83	90
Overall length	78	91	102	115
Rope diameter max.	5	5	5	7
Loading capacity in kg	10	10	15	18
Weight in kg about	0,10	0,13	0,20	0,26

Please specify in order:

A = with longitudinal plate

B = with transverse plate

No. 157 Pulleys with plain bearing

Case galvanized steel, pulleys made of cast iron. Size 30 mm only with galvanized steel pulley.
All dimensions in mm.

Pulley outside diameter Groove base diameter	**30** 22	**40** 32	**50** 42	**60** 50
Groove width	6	6	6	8
Groove depth	4	4	4	5
Rim width	10	11,5	12	12
Axial length	23	24	24	24
Dimensions of base palte	65 x 27	65 x 27	65 x 27	65 x 27
Diameter of screw-down hole	4,5	4,5	4,5	4,5
Hole spacing	42	42	42	42
Overall length	56	56	78	78
Rope diameter max.	5	5	5	7
Loading capacity in kg	10	10	18	18
Weight in kg about	0,10	0,12	0,16	0,19

No. 158 a Pulleys with wood screw

Pulleys made of cast iron, case galvanized steel, axle made of brass.
If required size 60 mm also with polyamide pulley.
All dimensions in mm.

Pulley outside diameter Groove base diameter	**45** 33	**60** 46	**80** 66
Groove width	9	10	10
Groove depth	6	7	7
Rim width	13	16	17,5
Axial length	28	32	32
Overall length	109	139	158
Screw diameter	7,1	7,1	7,1
Length of screw	45	60	60
Length of thread	27	40	40
Rope diameter max.	8	9	10
Loading capacity in kg	18	22	22
Weight in kg about	0,15	0,24	0,34

No. 158 b Pulleys with becket

Pulleys made of cast iron, case galvanized steel, axle made of brass.
If required size 60 mm also with polyamide pulley.
All dimensions in mm.

Pulley outside diameter Groove base diameter	**45** 33	**60** 46	**80** 66
Groove width	9	10	10
Groove depth	6	7	7
Rim width	14	16	17,5
Axial length	28	32	32
Overall length	109	122	142
Becket diameter	12	12	12
Becket outside diameter	28	28	28
Material diameter of becket	8	8	8
Rope diameter max.	8	9	10
Loading capacity in kg	18	22	22
Weight in kg about	0,14	0,24	0,34

No. 158 d Pulleys with thread screw and nut

Pulleys made of cast iron, case galvanized steel, axle made of brass.
If required size 60 mm also with polyamide pulley.
All dimensions in mm.

Pulley outside diameter Groove base diameter	**45** 33	**60** 46	**80** 66
Groove width	9	10	10
Groove depth	6	7	7
Rim width	14	16	17,5
Axial length	26	27	33
Overall length	85	98	118
Length of screw	27	27	27
Length of thread	21	21	21
Size of thread	M 8	M 8	M 8
Rope diameter max.	8	9	10
Loading capacity in kg	18	22	22
Weight in kg about	0,13	0,22	0,31

No. 158 e Pulleys with wood screw and joint

Pulleys made of cast iron, case galvanized steel, axle made of brass.
If required size 60 mm also with polyamide pulley.
All dimensions in mm.

Pulley outside diameter Groove base diameter	**60** 46	**80** 66
Groove width	10	10
Groove depth	7	7
Rim width	16	17,5
Axial length	32	32
Overall length	162	182
Length of thread	40	40
Screw diameter	8	8
Length of screw	69	69
Rope diameter max.	9	10
Loading capacity in kg	22	22
Weight in kg about	0,28	0,38

No. 159 Pulleys with swivel hook

Pulleys made of cast iron, body made of steel, hook made of malleable cast iron
All dimensions in mm.

Pulley outside diameter Groove base diameter	**30** 22	**40** 30	**50** 36	**60** 44	**80** 60	**100** 78	**120** 98
Groove width	6	9	10	11	13	16	16
Groove depth	4	5	7	8	10	11	11
Rim width	10	14	15,5	18,5	20	24	26
Axial length	21	26	26	30	33	48	53
Overall length	65	78	94	104	132	164	200
Hook length	29,5	29,5	35,5	35,5	42	45	62
Opening width	10	10	10	10	11	14	17
Rope diameter max.	5	8	9	10	11	14	14
Loading capacity in kg	15	18	22	22	22	40	55
Weight in kg about	0,05	0,08	0,12	0,18	0,41	0,58	1,00

No. 160 Pulleys with wood screw

Pulleys made of cast iron, body and wood screw galvanized steel.
All dimensions in mm.

Pulley outside diameter Groove base diameter	**40** 30	**50** 36	**60** 44	**70** 50	**80** 60	**100** 78	**120** 98
Groove width	9	10	11	13	13	16	16
Groove depth	5	7	8	10	10	11	11
Rim width	14	15,5	18,5	20	20	24	26,5
Axial length	26	25	30	33	33	48	51
Overall length	95	105	130	145	150	187	223
Screw diameter	7,1	7,1	7,1	7,1	7,1	8	8
Length of screw	45	45	60	60	60	70	70
Length of thread	27	27	40	40	40	40	40
Rope diameter max.	8	9	10	12	12	15	15
Loading capacity in kg	18	22	22	22	22	40	55
Weight in kg about	0,08	0,14	0,18	0,26	0,37	0,63	1,08

Please specify in order:

A = with longitudinal plate

B = with transverse plate

No. 161 Pulleys

Case made of steel, coated. With rope pulleys No. 28 made of cast iron, hub bored.
All dimensions in mm.

Pulley outside diameter Groove base diameter	**80** 67	**100** 83	**130** 108
Groove width	9	11	13
Groove depth	6,5	8,5	11
Rim width	13	16	19
Width of base plate	40	40	45
Length of base plate	130	142	190
Size of base plate	6	6	6
Diameter of screw-down hole	10,5	10,5	10,5
Hole spacing	96	108	156
Overall height	94	115	149
Rope diameter max.	8	10	12
Loading capacity in kg	125	130	150
Weight in kg about	0,57	0,73	1,40

Spare pulleys **fitting pulleys No. 161**

No. 28 Light rope pulleys made of cast iron

with narrow, deep groove, groove machined, hub bored, with straight spokes, fitting pulleys No. 161.
All dimensions in mm.

Outside diameter Groove base diameter	**80** 67	**100** 83	**130** 108
Groove radius	4,5	5,5	6,5
Groove depth	6,5	8,5	11
Rim width	13	16	19
Bore for axle	8	10	12
Hub length	17	19	23
Hub diameter	20	22	28
Rope diameter max.	8	10	12
Loading capacity in kg	125	130	150
Weight in kg about	0,18	0,30	0,48

No. 162 Pulleys with high loading capacity

Case made of steel, with galvanized rope pulleys No. 163 made of steel with maintenance-free plain bearing (DU bush).
All dimensions in mm.

Pulley outside diameter Groove base diameter	**50** 38	**75** 60	**100** 80	**125** 103	**150** 126
Groove radius	4	5	6	7	8
Groove depth	6	7,5	10	11	12
Rim width	12	18	21	22	24
Case width	30	30	40	60	60
Overall depth	38	44	48	49	49
Diameter of screw-down hole	9	11	11	11	11
Hole spacing width	-	-	-	30	30
Hole spacing height	95	120	145	170	200
Overall length	115	140	175	200	230
Rope diameter max.	6	8	9	10	12
Loading capacity in kg	50	100	150	250	500
Weight in kg about	0,50	0,90	1,30	2,50	3,30

Spare pulleys fitting pulleys No. 162

No. 163 Rope pulleys made of steel

with maintenance-free plain bearing (DU bush).
All dimensions in mm.

Outside diameter Groove base diameter	**50** 38	**75** 60	**100** 80	**125** 103	**150** 126	**200** 166	**250** 213	**300** 257
Groove radius	4	5	6	7	8	5,3	6,5	8,5
Groove depth	6	7,5	10	11	12	17	18,5	21,5
Rim width	12	18	21	22	24	32	36	40
Bore for axle	10	12	16	16	20	30	40	50
Hub length	15	20	25	25	25	42	45	62
Hub diameter	29	36	42	45	56	80	95	110
Rope diameter max.	6	8	9	10	12	10	12	16
Loading capacity in kg	100	200	300	500	750	1500	2000	4000
Weight in kg about	0,10	0,30	0,60	0,90	1,40	4,30	7,80	12,10

No. 164 Pulleys

with rope pulleys No. 163 made of steel with maintenance-free plain bearing (DU bush), case made of galvanized steel plate. If required also with rope pulley with ball bearings No. 163 K.
All dimensions in mm.

Outside diameter Groove base diameter	**50** 38	**75** 60	**100** 80	**125** 103	**150** 125	**200** 166	**250** 213	**300** 257
Groove radius	4	5	6	7	8	5,3	6,5	8,5
Groove depth	6	7,5	10	11	12,5	17	18,5	21,5
Rim width	12	18	21	22	24	32	36	40
Width of base plate	68	86	80	104	130	130	160	170
Length of base plate	65	75	100	120	145	200	230	240
Size of base plate	7	10	10	10	12	15	15	20
Diameter of screw-down hole	7	9	9	9	14	14	18	18
Distance between holes in axial direction	50	60	65	80	90	100	120	130
Distance between holes in longitudinal direction	55	55	80	90	120	170	190	200
Overall height	70	105	125	153	190	225	275	325
Overall height up to centre of axle	45	67	75	90	115	125	150	175
Rope diameter max.	6	8	9	10	12	10	12	16
Loading capacity in kg	300	600	800	1100	1250	2000	3200	5000
Weight in kg about	0,40	0,80	1,40	1,80	2,50	16,00	22,00	30,00

No. 166 Pulleys made of cast iron

groove edge and machined, coated.
All dimensions in mm.

Pulley outside diameter Groove base diameter	**70** 54
Groove width on base	9
Groove width on rim	11
Groove depth	8
Rim width	19
Width of base plate	37
Length of base plate	98
Size of base plate	5
Diameter of screw-down hole	8,5
Hole spacing	78
Overall height	80
Rail width max.	8
Loading capacity in kg	40
Weight in kg about	0,51

No. 180 Pulleys

Case made of steel plate. With rope pulleys No. 181 made of steel with maintenance-free ball bearings, groove machined.
All dimensions in mm.

Pulley outside diameter Groove base diameter	**85** 60	**125** 90	**180** 135	**240** 185	**300** 230	**360** 280
Groove radius	3,2	4,8	7	9,5	12,5	15
Groove depth	12	17	22	27	35	40
Rim width	21	30	38	50	60	70
Width of base plate	86	127	162	216	252	294
Length of base plate	80	110	170	210	270	320
Size of base plate	5	6	10	15	15	20
Diameter of screw-down hole	9	13	17	21	25	32
Distance between holes in axial direction	66	97	127	166	192	234
Distance between holes in longitudinal direction	60	80	130	160	210	260
Overall height	102	134	185	247	307	370
Overall height up to centre of axle	60	71	95	125	155	185
Rope diameter max.	6	9	13	18	23	27
Loading capacity in kg	500	1000	2000	4000	6400	10000
Weight in kg about	1,40	3,70	10,20	23,80	44,00	75,00

Spare pulleys **fitting pulleys No. 180**

No. 181 Rope pulleys made of steel

groove machined, with sealed ball bearings, fitting pulleys No. 180.
All dimensions in mm.

Outside diameter Groove base diameter	**85** 60	**125** 90	**180** 135	**240** 185	**300** 230	**360** 280
Groove radius	3,2	4,8	7	9,5	12,5	15
Groove depth	12	17	22	27	35	40
Rim width	21	30	38	50	60	70
Bore for axle	12	20	25	35	45	60
Hub length	17,5	30	33	45	54	67
Hub diameter	40	65	75	110	130	170
Rope diameter max.	6	9	13	18	23	27
Type of bearing	6001-2RS	6204-2RS	6205-2RS	6307-2RS	6309-2RS	6312-2RS
Loading capacity in kg	500	1000	2000	4000	6400	10000
Weight in kg about	0,70	1,90	5,40	12,80	24,00	40,00

No. 186 Pulleys

Case made of cast iron (60 – 325 mm) respectively steel (375 – 470 mm).
Fitting wire rope pulleys No. 169 made of cast iron with self-lubricating bearing with grease chamber, groove machined. All dimensions in mm.

Outside diameter Groove base diameter	**60** 48	**90** 72	**120** 100	**150** 125	**190** 160
Groove radius	1,5	2	2,5	3	4
Groove depth	6	9	10	12	15
Rim width	13	15	18	22	27
Width of base plate	44	66	74	82	95
Length of base plate	56	84	92	115	150
Size of base plate	8	10	13	15	17
Diameter of screw-down hole	7	9	11,5	11,5	14
Distance between holes in axial direction	30	44	50	55	65
Distance between holes in longitudinal direction	42	62	70	88	120
Overall height	70	102	135	167	210
Overall height up to centre of axle	40	57	75	92	115
Rope diameter max.	3	4	5	6	8
Loading capacity in kg	200	300	500	1000	1500
Weight in kg about	0,90	1,30	1,80	3,00	5,70

Outside diameter Groove base diameter	**235** 200	**280** 240	**325** 280	**375** 320	**470** 400
Groove radius	5	6	7	8	10
Groove depth	17	20	22	27	35
Rim width	32	36	41	48	58
Width of base plate	108	120	143	185	225
Length of base plate	187	220	260	300	380
Size of base plate	20	22	25	22	30
Diameter of screw-down hole	18	18	23	26	33
Distance between holes in axial direction	70	80	95	95	125
Distance between holes in longitudinal direction	150	180	212	240	310
Overall height	256	304	353	400	505
Overall height up to centre of axle	138	164	190	212	270
Rope diameter max.	10	12	14	16	20
Loading capacity in kg	2000	3000	4000	6400	10000
Weight in kg about	10,00	15,30	24,30	46,00	87,00

Hinged wire rope guide pulleys

No. 191 Hinged wire rope guide pulleys, single sheave

base plate and side plates made of steel. With rope pulleys No. 169 made of cast iron with self-lubricating bearing and grease chamber.
All dimensions in mm.

Pulley outside diameter Groove base diameter	**120** 100	**150** 125	**190** 160	**235** 200	**280** 240	**325** 280
Groove width	5	6	8	10	12	14
Groove depth	10	12	15	17	20	22
Rim width	18	22	27	32	36	41
Width of base plate	120	170	170	200	220	270
Length of base plate	150	230	240	300	350	380
Size of base plate	6	8	10	12	14	16
Diameter of screw-down hole	11,5	11,5	14	18	18	22
Hole spacing width	100	140	140	160	180	220
Hole spacing height	130	200	210	260	310	330
Overall height up to centre of axle	112	142	165	199	239	277
Rope diameter max.	5	6	8	10	12	14
Loading capacity in kg	500	1000	1500	2000	3000	4000
Weight in kg about	4,00	6,20	12,00	19,00	26,20	47,00

No. 192 Hinged wire rope guide pulleys, two sheaves

base plate and side plates made of steel. With rope pulleys No. 169 made of cast iron with self-lubricating bearing and grease chamber.
All dimensions in mm.

Pulley outside diameter Groove base diameter	**120** 100	**150** 125	**190** 160	**235** 200	**280** 240	**325** 280
Groove width	5	6	8	10	12	14
Groove depth	10	12	15	17	20	22
Rim width	18	22	27	32	36	41
Width of base plate	190	245	260	310	350	420
Length of base plate	150	230	240	300	350	380
Size of base plate	8	10	12	14	16	20
Diameter of screw-down hole	11,5	11,5	14	18	22	26
Number of screw holes	4	4	6	6	6	6
Hole spacing b	85	108	115	135	155	185
Hole spacing h	130	200	210	260	310	330
Overall height up to centre of axle	114	144	167	196	241	281
Space between axles	65	85	90	110	120	150
Rope diameter max.	5	6	8	10	12	14
Loading capacity per piece	500	1000	1500	2000	3000	4000
Weight in kg about	8,60	14,60	25,60	37,00	57,00	94,60

Spare pulleys

fitting wire rope pulleys No. 186, No. 191 and No. 192

No. 169 Wire rope pulleys made of cast iron

groove machined, fitting wire rope pulleys No. 186, No. 191 and No. 192.
Outside diameter 60 - 325 mm: with self-lubricating bearing and grease chamber.
Outside diameter 375 - 470 mm: with bronze bearing and lubrication pockets. All dimensions in mm.

Outside diameter Groove base diameter	**60** 48	**90** 72	**120** 100	**150** 125	**190** 160
Groove radius	1,5	2	2,5	3	4
Groove depth	6	9	10	12	15
Rim width	13	15	18	22	27
Bore for axle	8	14	14	22	32
Hub length	24	32	35	40	42
Hub diameter	22	32	35	46	62
Rope diameter max.	3	4	5	6	8
Loading capacity in kg	200	300	500	1000	1500
Weight in kg about	0,30	0,52	0,85	1,45	2,60

Outside diameter Groove base diameter	**235** 200	**280** 240	**325** 280	**375** 320	**470** 400
Groove radius	5	6	7	8	10
Groove depth	17	20	22	27	35
Rim width	32	36	41	48	58
Bore for axle	40	50	60	70	70
Hub length	50	62	70	85	90
Hub diameter	78	92	108	120	140
Rope diameter max.	10	12	14	16	20
Loading capacity in kg	2000	3000	4000	6400	10000
Weight in kg about	4,50	6,80	10,80	16,50	34,70

No. 218 Roller bearing pulleys

made of cast iron, with roller bearing, bolt and two nuts, fitting sliding door pulleys No. 102.
All dimensions in mm.

Outside diameter D	60	75	90	105	120	140	160
Axle diameter K	8	9	9	12	12	12	16
Groove width on base a	6	9	9	11	11	14	14
Groove width on rim b	8	11	11	13	13	17	17
Groove depth c	6	8	9	10	10	10	10
Groove base diameter d	48	59	72	85	100	120	140
Rim width e	16	19	19	21	22	26	27
Hub length f	20	27	27	32	32	34	34
Axial length g	50	55	55	70	70	85	85
Length of thread h	10	10	10	12	12	16	16
thickness of nut i	6,5	5	5	6	6	13	13
Rail width max. m	5	8	8	10	10	13	13
Hub diameter n	24	27	27	35	35	40	48
Size of thread M	M 8	Ww 3/8"	Ww 3/8"	M 12	M 12	M 12	M 16
Loading capacity per piece in kg	30	35	50	75	100	135	175
Weight in kg about	0,20	0,37	0,53	0,71	0,89	1,41	1,56

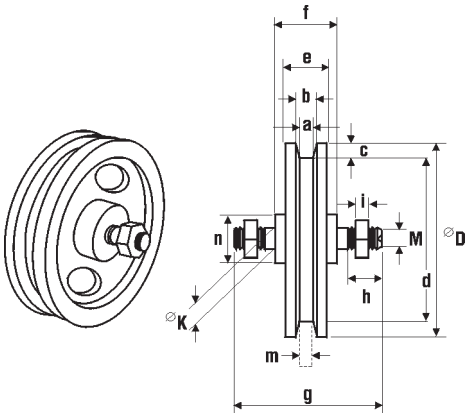

No. 218 S (Type A) Roller bearing pulleys with edged groove

made of cast iron, heavy and robust design, with roller bearing basket, bolt and two nuts.
All dimensions in mm.

Outside diameter	50	60	75	90	105	120
Bore	12	12	12	12	12	12
Groove width	9 x 10	9 x 10	9 x 11	9 x 11	11 x 13	11 x 13
Groove depth	6	7	8	9	10	10
Groove base diameter	38	46	59	72	85	100
Rim width	18	18	19	20	22	22
Hub length	27	27	27	27	32	32
Axial length	62	62	62	62	70	70
Rail width max.	8	8	8	8	10	10
Hub diameter	34	34	34	34	36	36
Loading capacity in kg	30	30	40	50	75	100
Weight in kg about	0,30	0,36	0,40	0,55	0,75	1,00

Outside diameter	140	160	200	225
Bore	16	16	16	22
Groove width	14 x 17	14 x 17	14 x 17	16 x 20
Groove depth	10	10	10	15
Groove base diameter	120	140	180	195
Rim width	27	27	28	38
Hub length	34	34	34	50
Axial length	85	85	85	125
Rail width max.	13	13	13	15
Hub diameter	48	48	51	70
Loading capacity in kg	150	175	200	250
Weight in kg about	1,60	1,80	2,90	5,20

No. 218 S (Type B) Roller bearing pulleys with round groove

made of cast iron, heavy and robust design, with roller bearing basket, bolt and two nuts.
All dimensions in mm.

Outside diameter	50	60	75	90	105	120
Bore	12	12	12	12	12	12
Groove width	9	9	9	9	11	11
Groove depth	6	7	8	9	10	10
Groove base diameter	38	46	59	72	85	100
Rim width	18	18	19	20	22	22
Hub length	27	27	27	27	32	32
Axial length	62	62	62	62	70	70
Rail width max.	8	8	8	8	10	10
Hub diameter	34	34	34	34	36	36
Loading capacity in kg	30	30	40	50	75	100
Weight in kg about	0,30	0,36	0,40	0,55	0,75	1,00

Outside diameter	140	160	180	200	225	250
Bore	16	16	16	16	22	22
Groove width	14	14	14	14	16	16
Groove depth	10	10	10	10	15	15
Groove base diameter	120	140	160	180	195	220
Rim width	27	27	28	28	38	38
Hub length	34	34	34	34	50	50
Axial length	85	85	85	85	125	125
Rail width max.	13	13	13	13	15	15
Hub diameter	48	48	51	51	70	70
Loading capacity in kg	150	175	200	200	250	250
Weight in kg about	1,60	1,80	2,50	2,90	5,20	7,00

No. 594 Guide sheave made of plastic

with screw bolt, pulley made of polyamide, axle and nuts galvanized steel, with plain bearing.
All dimensions in mm.

D	48
b	40
h	80,5
h 1	51,5
i	9
Size of thread M	M 20
Loading capacity in kg	150
Weight in kg about	0,31

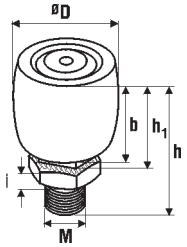

No. 595 Guide sheaves made of steel

with screw bolt, pulley, axle and nuts galvanized steel, with precision ball bearing, water protected.
All dimensions in mm.

D	48	100	155
b	30	40	45
d	25	40	62
h	65	90	120
h 1	35	50	60
i	8	10	14,5
Size of thread M	M 16	M 24	M 42
Loading capacity in kg	200	750	1500
Weight in kg about	0,45	2,47	7,50

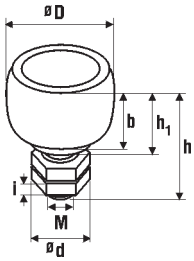

No. 597 Guide sheaves made of steel

with screw bolt, pulley and axle galvanized steel, with precision ball bearing, water protected.

D	48	100	155
b	30	40	45
d	25	40	62
h	60	90	120
Loading capacity in kg	200	750	1500
Weight in kg about	0,47	2,76	7,88

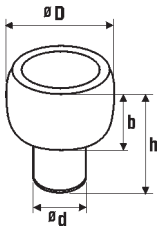

No. 829 Wire rope guide pulleys

fitting wall and hand winches, case made of steel, coated. With rope pulleys No. 23 made of cast iron, groove machined, hub bored. If required also with roller bearing (design „W“).
All dimensions in mm.

Pulley outside diameter Groove base diameter	**115** 89	**155** 129	**220** 184	**260** 222	**310** 250
Groove radius	5,5	5,5	8,5	9,5	14
Groove depth	13	13	18	19	30
Rim width	24	27	32	40	52
Width of base plate b	125	150	175	255	270
Length of base plate l	65	115	165	200	240
Size of base plate	4	5	6	8	9
Diameter of screw-down hole	12	14	17	21	21
Distance between holes in axial direction	95	110	125	199	210
Distance between holes in longitudinal direction	35	75	115	144	180
Overall height	126	163	236	278	339
Overall height up to the axle centre	69	85	126	148	184
Rope diameter max.	10	10	16	18	26
Loading capacity in kg	500	1000	2000	3000	5000
Weight in kg about	1,50	3,00	6,50	12,00	23,00

Spare pulleys **fitting wire rope guide pulleys No. 829 and gin blocks No. 22**

No. 23 Wire rope pulleys made of cast iron

groove machined, hub bored, fitting gin blocks No. 22 and wire rope pulleys No. 829. If required also with red bronze bush (design „R“) or roller bearing (design „W“).
All dimensions in mm.

Outside diameter Groove base diameter	**115** 89	**155** 129	**220** 184	**260** 222	**310** 250
Groove radius	5,5	5,5	8,5	9,5	14
Groove depth	13	13	18	19	30
Rim width	24	27	32	40	52
Bore for axle	14	19	22	25	35
Hub length	26	28	35	43	56
Hub diameter	36	48	54	65	85
Rope diameter max.	10	10	16	18	26
Loading capacity in kg	500	1000	2000	3000	5000
Weight in kg about	0,90	1,40	3,30	5,20	10,00

No. 902 Pulleys made of polyamide

groove edged, maintenance-free plain bearing.
All dimensions in mm.

Outside diameter Groove base diameter	**61** 45	**100** 75	**112** 90	**122** 92
Groove width	10 x 16	14 x 18	45 x 48	14 x 16
Groove depth	8	12,5	11	15
Rim width	22	24,5	58	30
Bore for axle	10	16	20	16
Hub length	23	28	60	35
Hub diameter	20	37	40	40
Rail width max.	9	12	40	13
Loading capacity in kg	70	140	640	190
Weight in kg about	0,04	0,13	0,27	0,27

Pulleys
with axle

No. 1041 Pulleys with axle

for manually operated, bottom-pulley sliding doors. Made of steel (160 mm) and cast iron (200 - 240 mm), with two precision ball bearings, axle made of bright-drawn steel with lubrication nipple.
All dimensions in mm.

D	160	200	220	240
K	20	25	25	30
a	23	34	34	36
b	25	36	36	38
c	15	15	18	20
e	45	52	52	65
f	52	60	60	75
g	108	115	120	140
h	17	20	20	24
i	9	10	10	12
m	22	32	32	34
n	69	76	84	102
Size of thread M	M 20	M 24	M 24	M 30
Loading capacity in kg	450	950	1050	1250
Weight in kg about	3,89	6,67	8,36	13,98

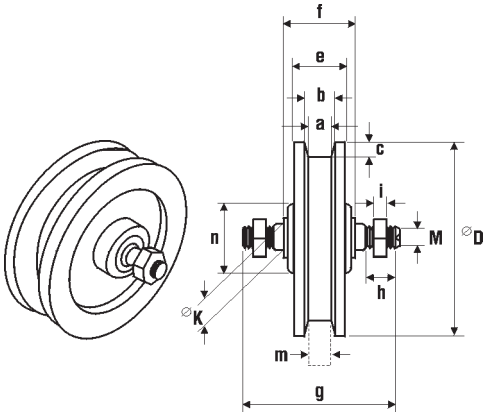

No. 1203 Trolley wheels

with maintenance-free ball bearing and machined treads which facilitate the usage on all standard profiles with inclined or parallel flanges, fitting geared trolleys No. 703 - 704. From loading capacity 4000 kg on trolley wheels with two ball bearings. Loading capacity acc. to DIN 15070. All dimensions in mm.

Loading capacity in kg nominal diameter	**250** 50	**360** 65	**630** 65	**825** 85	**1000** 120	**1600** 120
a	50	65	65	83	118	118
b	32	32	42	47	52	62
c	12	12	20	25	25	30
d	60	90	90	115	150	150
f	10	13	9	11	14	13
g	10	10	12	12	15	16
h	8	8	9	11	9	9
k	28	31	30	34	38	38
m	6	5	3	4	5	5
n	2	4	4	5	5	5
o	20	22	23	25	28	28
p	17	17	25	30	35	40
Type of bearing	6201-2RS	6201-2RS	6004-2RS	6005-2RS	6205-2RS	6206-2RS
Material	GG 25	GG 25	GGG 50	GGG 50	GGG 50	GGG 50
Weight in kg about	0,29	0,65	0,53	1,10	2,80	2,70

Loading capacity in kg nominal diameter	**4000** 150	**4800** 200	**6000** 250	**8000** 300
a	150	198	248	298
b	75	75	90	100
c	45	45	50	55
d	185	240	290	340
f	13	22	15	15,5
g	32	32	50	50
h	9	9	8	12,5
k	54	63	73	78
m	6	9,5	9,5	9,5
n	6	5,5	6,5	6,5
o	40	47	54	60
p	55	55	65	70
Type of bearing	6009-2RS	6009-2RS	6210-2RS	6211-2RS
Material	GGG 50	GGG 50	GGG 50	GGG 50
Weight in kg about	5,50	9,80	17,20	23,80

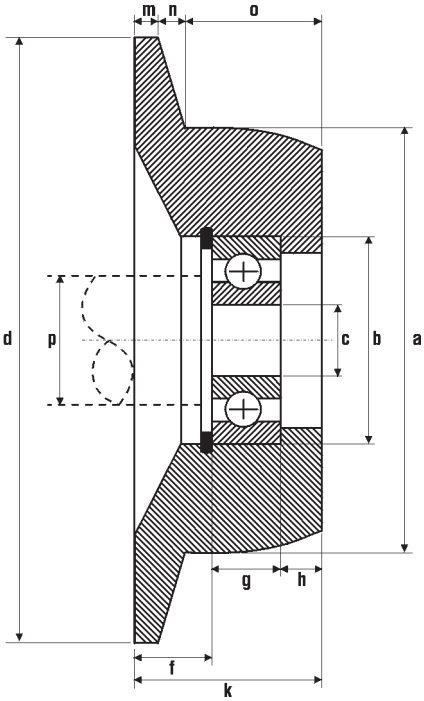

Please specify in order:

A = with plain bearing

B = with sealed ball bearings

No. 1204 Trolley wheels

made of cast iron, pulley tread and rim turned on a lathe, coated. Tread with 3° incline to axle, from size 150 mm on with lubrication nipple.
All dimensions in mm.

Wheel diameter without wheel flange	**a**	**50**	**75**	**100**	**125**	**150**
Wheel diameter with wheel flange	b	62	100	125	145	175
Wheel width with wheel flange	c	32	40	46	46	46
Tread width without wheel flange	f	26	30	36	36	36
Hub length symmetric	g	32	47	52	52	52
Hub diameter	e	50	62	62	62	62
Bore in case of plain bearing H7	d	15	20	20	20	20
Bore in case of ball bearing	d	-	20	20	20	20
Type of ball bearing		-	6204-ZZ	6204-ZZ	6204-ZZ	6204-ZZ
Loading capacity in kg		400	800	1000	1000	1000
Weight in kg about		0,40	1,50	2,10	3,00	3,20

Wheel diameter without wheel flange	**a**	**180**	**200**	**201**	**250**	**251**
Wheel diameter with wheel flange	b	210	230	230	300	300
Wheel width with wheel flange	c	48	57	80	65	65
Tread width without wheel flange	f	36	40	62	50	50
Hub length symmetric	g	52	60	90	70	70
Hub diameter	e	65	87	110	90	110
Bore in case of plain bearing H7	d	30	30	-	40	-
Bore in case of ball bearing	d	20	25	40	30	40
Type of ball bearing		6204-ZZ	6205-ZZ	6208-ZZ	6206-ZZ	6208-ZZ
Loading capacity in kg		1200	1500	3000	2000	3000
Weight in kg about		4,50	7,50	13,00	12,50	16,00

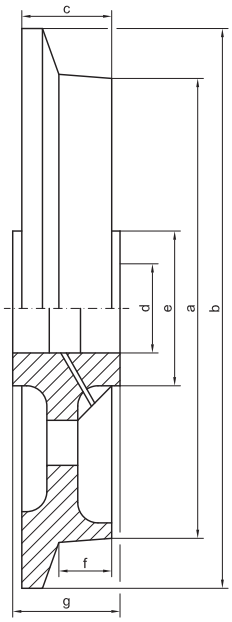

No. 1207 Ball bearing pulleys made of steel

hardened, with straight tread, bicycle type ball bearing.
All dimensions in mm.

Outside diameter Rim width	**30** 11	**40** 11	**50** 11
Hub length	12	12	12
Bore	7,1	8,1	8,1
Loading capacity in kg	70	95	95
Weight in kg about	0,05	0,14	0,16

No. 1208 Ball bearing pulleys made of steel

hardened, with crowned tread, bicycle type ball bearing.
All dimensions in mm.

Outside diameter Rim width	**30** 11	**40** 11	**50** 11
Hub length	12	12	12
Bore	7,1	8,1	8,1
Tread radius	9	9	9
Loading capacity in kg	70	95	95
Weight in kg about	0,05	0,14	0,16

Pulleys
made of stainless steel

No. 1306 Pulleys made of stainless steel

made of material 1.4301, groove machined, with maintenance-free plain bearing (DU bush).
Fitting rope pulleys made of stainless steel No. 1302. If required also with rope pulley with ball bearings No. 1304.
All dimensions in mm.

Outside diameter	50	100	150
Groove base diameter	38	80	126
Groove radius	4	6	8
Groove depth	6	10	12
Rim width	12	21	24
Case width	30	40	60
Overall depth	21	26	28
Diameter of screw-down hole	9	11	11
Hole spacing width	-	-	30
Hole spacing height	95	145	200
Overall length	115	175	230
Rope diameter max.	6	9	12
Loading capacity in kg	50	150	500
Weight in kg about	0,50	1,30	3,30

No. 1308 Pulleys made of stainless steel

Made of material 1.4301, groove machined, with maintenance-free plain bearing (DU bush).
Fitting rope pulleys made of stainless steel No. 1302. If required also with rope pulley with ball bearings No. 1304. All dimensions in mm.

Outside diameter	50	75	100	150
Groove base diameter	38	60	80	126
Groove radius	4	5	6	8
Groove depth	6	7,5	10	12
Rim width	12	18	21	24
Width of base plate	68	88	90	120
Length of base plate	65	75	100	145
Size of base plate	4	6	6	8
Diameter of screw-down hole	7	9	9	14
Distance between holes in axial direction	50	65	65	90
Distance between holes in longitudinal direction	55	55	80	120
Overall height	70	106	125	190
Overall height up to centre of axle	45	68	75	115
Rope diameter max.	4	8	9	12
Loading capacity in kg	300	500	600	1000
Weight in kg about	0,40	0,90	1,40	4,30

No. 1398 Pulleys made of stainless steel

turned, with precision ball bearings and edged groove, axle made of stainless steel with two nuts, fitting sliding door pulleys No. 1390. All dimensions in mm.

D	75	90
K	10	10
a	9	9
b	11	11
c	8	8
e	19	20
f	28	32
h	10	10
i	6	6
m	8	8
n	32	40
Size of thread M	M 10	M 10
Loading capacity per piece in kg	250	375
Weight in kg about	0,20	0,37

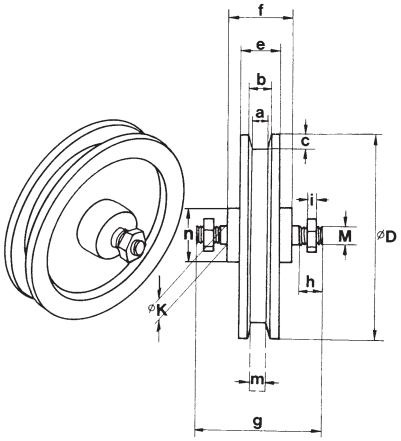

No. 1400 Pulleys with axle

for electrically operated, bottom-pulley sliding doors, galvanized steel, precision ball bearing, axle made of bright-drawn steel with lubrication nipple, outside diameter 160 mm fitting sliding door pulleys No. 630.
All dimensions in mm.

D	100	120	140	160
K	15	15	20	20
a	14	14	14	14
b	17	17	17	17
c	10	10	10	10
e	28	30	30	32
f	32	35	35	40
g	80	85	90	95
h	16	16	17	17
i	8	8	9	9
m	13	13	13	13
Size of thread M	M 14	M 14	M 20	M 20
Loading capacity in kg	200	270	400	500
Weight in kg about	1,42	2,28	3,24	4,59

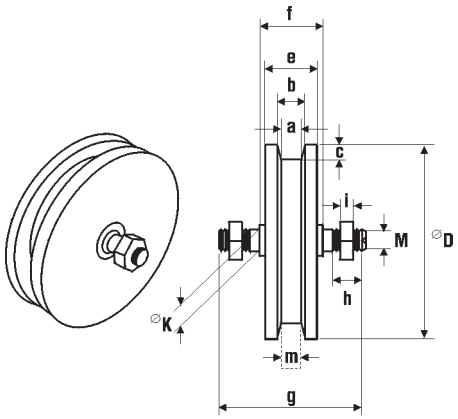

No. 1410 Pulleys with axle

for electrically operated, bottom-pulley sliding doors, galvanized steel, with two precision ball bearings, axle made of bright-drawn steel with lubrication nipple, fitting square and light rain DIN 5901.
All dimensions in mm.

D	120	160	180	200
K	20	20	25	25
a	27	27	27	34
b	29	29	29	36
c	10	15	15	15
e	40	42	45	52
f	44	46	50	57
g	100	108	110	120
h	17	17	20	20
i	9	9	10	10
m	25	25	25	32
Size of thread M	M 20	M 20	M 24	M 24
Loading capacity in kg	500	650	750	1000
Weight in kg about	2,83	5,15	7,41	10,53

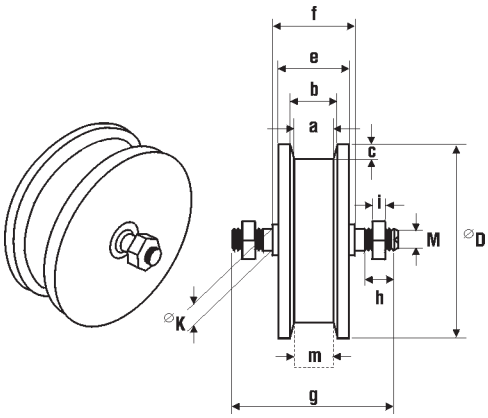

No. 1980 S – 1986 S Pulleys with axle

for highly stressed heavy doors and electrically operated doors. Pulleys made of steel with two dust proof ball bearings, no regreasing due to the special grease applied, blue primed, incl. axle with screws, weathering resistant. No. 1985 S and No. 1986 S fitting light rail DIN 5901. All dimensions in mm.

Article No.	1980 S	1981 S	1982 S	1983 S	1984 S	1985 S	1986 S
D	44	55	75	100	125	160	200
K	10	12	15	20	25	30	35
c	3	5	6	8	12	15	18
d	38	45	63	84	100	130	164
e	19	19	28	35	40	50	60
f	21	24	33	40	46	58	70
g	32	32	53	59	69	87	108
n	13,2	12,3	15,3	20,3	25,3	32	38
Diameter of spacer ring	-	20	22	30	36	40	45
Rail width max.	40 x 12	50 x 12	60 x 15	60 x 20	60 x 25	S 10	S 14
Loading capacity in kg	160	250	375	500	750	1000	1500
Weight in kg about	0,20	0,30	0,80	1,60	3,50	6,50	11,50

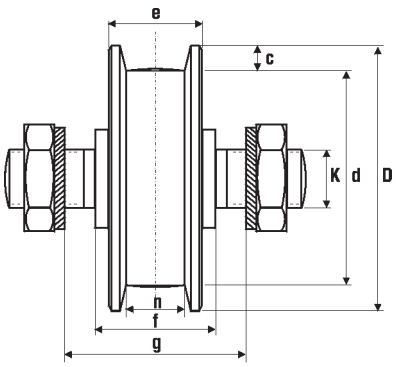

Nr. 1980 S - 1981 S

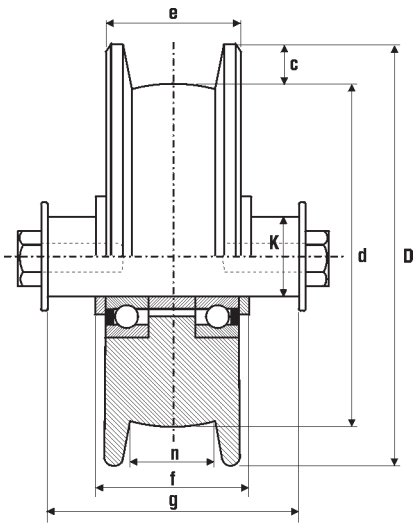

Nr. 1982 S - 1986 S

Rope grips

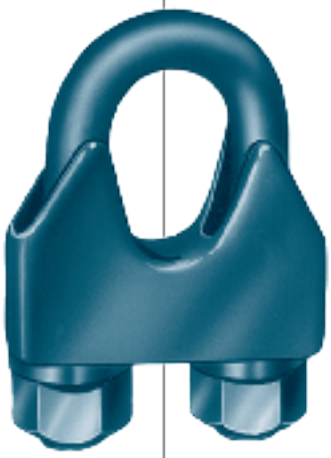

Product								Page
Eccentric grips No. 422 - 426								6.02
Rope clip No. 428								6.02
Rope clip No. 441 for steel cables or steel wires								6.03
Rope clip No. 441 a for aluminium cables or aluminium wires								6.03
Wire rope grip No. 501 acc. to DIN 741								6.04
Rope socket No. 524 acc. to EN 13411-7 (former DIN 15315)								6.05
Oval wire rope grip No. 529								6.06
Single wire rope grip No. 530 a								6.07
Double wire rope grip No. 530 b								6.07
Wedge socket No. 537 acc. to DIN 43148 / EN 13411-6								6.08
Wire rope grip No. 545 acc. to. EN 13411-5-1 (former DIN 1142)								6.09
Rope grips No. 1310 made of stainless steel acc. to DIN 741								6.10
Simplex wire rope grips No. 1314 a made of stainless steel								6.10
Duplex wire rope grips No. 1314 b made of stainless steel								6.10

Rope grips

No. 422 - 426 Eccentric grips

hardened and grooved steel jaws, galvanized.
All dimensions in mm.

Article No. Gripping diameter	**422** 1 - 4	**423** 1 - 5	**424** 1 - 8	**425** 1 - 12	**426** 5 - 18
Eye diameter	19	24	23	25	26
Loading capacity in kg	250	400	600	900	1000
Weight in kg about	0,24	0,38	0,60	0,96	1,85

No. 428 Heavy rope clips

with steel jaws and guide pin, bridges made of cast steel, galvanized.
All dimensions in mm.

Gripping diameter	**10 - 25**
Eye diameter	27
Loading capacity in kg	1500
Weight in kg about	2,55

No. 441 Rope clips

with long, hardened jaws made of high-quality quenched and tempered steel, bright galvanized,
for copper and steel wires or ropes.
All dimensions in mm.

profile

Rope cross section in mm² Rope diameter	**1 - 16** 1 - 5	**6 - 35** 3 - 9	**16 - 70** 4 - 12	**50 - 150** 6 - 18	**95 - 400** 10 - 28	**240 - 800** 20 - 40
Clear becket dimensions	19 x 19	21 x 21	27 x 27	38 x 25	40 x 30	40 x 30
Loading capacity in kg	500	1000	1700	3000	3500	4000
Weight in kg about	0,25	0,85	1,20	1,85	3,80	6,20

No. 441 a Rope clips

with long, hardened jaws made of high-quality quenched and tempered steel, bright galvanized,
for aluminium and steel cored aluminium wires or ropes.
All dimensions in mm.

profile

Rope cross section in mm² Rope diameter	**25 - 35** 5,4 - 8,5	**50 - 70** 8,6 - 12	**95 - 120** 12,1 - 16	**150 - 185** 15,5 - 19,6	**240 - 300** 20 - 24,5
Clear becket dimensions	21 x 21	27 x 27	38 x 29	38 x 29	38 x 29
Loading capacity in kg	1000	1700	3000	3500	4000
Weight in kg about	0,85	1,10	1,80	3,50	3,50

No. 501 Galvanized wire rope grips

acc. to DIN 741, body made of malleable cast iron.
All dimensions in mm.

Rope diameter in inches Rope diameter	**1/8** 3	**3/16** 5	**1/4** 6,5	**5/16** 8	**3/8** 9,5	**7/16** 11
Size of U-bolt/thread	4	5	5	6	8	8
Overall length	20	24	28	34	42	44
Clear width	4	6	8	9	11	12
Weight per 100 pieces in kg about	0,70	1,50	1,90	3,20	6,60	7,10

Rope diameter in inches Rope diameter	**1/2** 13	**9/16** 14	**5/8** 16	**3/4** 19	**7/8** 22	**1** 26
Size of U-bolt/thread	10	10	12	12	14	14
Overall length	55	57	63	75	85	95
Clear width	14	15	17	20	23	27
Weight per 100 pieces in kg about	12,50	14,00	20,50	30,80	35,70	56,90

Rope diameter in inches Rope diameter	**1.1/8** 30	**1.1/4** 34	**1.1/2** 40	**1.3/4** 45	**2** 50
Size of U-bolt/thread	16	16	16	18	18
Overall length	110	120	140	165	170
Clear width	32	36	42	47	54
Weight per 100 pieces in kg about	61,80	86,80	109,00	148,00	195,00

No. 524 Galvanized rope sockets

acc. to EN 13411-7 with wedge and bolt. Not suitable for ropes with a strength of more than 1770 N/mm² in each wire.
Case material 4 - 20 mm: S235JR acc. to EN 10025 and 21 - 40 mm: GS 26 CrMo 4V.
Wedge material 4 - 20 mm: GG 20 acc. to DIN 1691 and 21 - 40 mm: GTW 40 acc. to DIN 1692.
All dimensions in mm.

Rope diameter	4 - 5	6 - 8	9 - 11	12 - 14	15 - 17	18 - 20	21 - 25
a	19	28	38	48	60	72	82
b	12	14	17	22	25	27	32
c	33	45	60	78	92	106	108
d	10	12	16	18	22	25	42,5
e	14	20	26	32	36	40	44
f	3	4	6	8	10	12	29
g	55	75	95	115	130	150	115
h	110	150	190	230	260	300	460
k	68	92	117	141	162	186	182
r	9,5	12,5	16	19	23	26	30
r1	2,5	4	5,5	7	8,5	10	13
Weight in kg about	0,20	0,57	1,05	1,89	3,26	5,25	6,45

Rope diameter	26 - 30	31 - 35*	36 - 40*
a	96	134	146
b	38	44	50
c	127	174	189
d	52	55	60
e	55	60	70
f	14	27	29
g	130	150	175
h	335	390	460
k	180	203	227
r	30	34	35
r1	15	18	21
Weight in kg about	9,25	23,00	32,70

* without bolt

These symmetric rope sockets for rope end terminations are only to be used when subordinate demands are made. The fulfilment of requirements are to be checked combined with the rope, which shall be used with the rope socket, whenever legal and/or safety technical demands for these rope sockets are made.

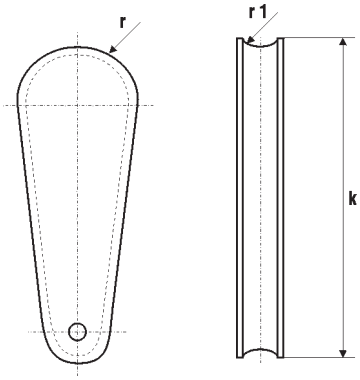

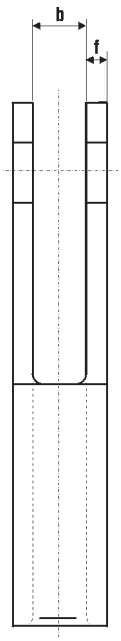

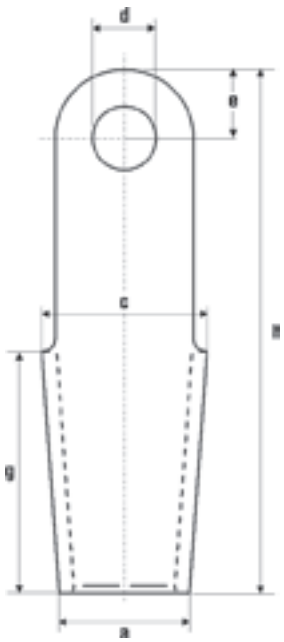

Galvanized oval wire rope grips

No. 529 Galvanized oval wire rope grips

made of malleable cast iron, with screw.
All dimensions in mm.

Rope diameter	2	3	4	5	6
Height above screw	11	12	14	15	15
Overall length	28	28	34	34	35
Size of thread	M 5	M 5	M 6	M 6	M 6
Weight per 100 pieces in kg about	2,20	2,30	4,00	4,00	5,00

No. 530 a Galvanized single wire rope grips, box-type

two-piece, made of sheet steel, for wire, manila, perlon or leather ropes.
All dimensions in mm.

Rope diameter	2	3	4	5	6	7	8
Overall length	15	17	20	25	30	33	37
Size of thread	M 4	M 4	M 5	M 5	M 6	M 8	M 8
Weight per 100 pieces in kg about	0,45	0,70	1,25	1,70	2,50	2,80	5,00

No. 530 b Galvanized double wire rope grips, box-type

two-piece, made of sheet steel, for wire, manila, perlon or leather ropes.
All dimensions in mm

Rope diameter	2	3	4	5	6	7	8	10
Overall length	30	35	40	50	60	64	75	84
Size of thread	M 4	M 4	M 5	M 5	M 6	M 8	M 8	M 10
Weight per 100 pieces in kg about	0,90	1,40	2,50	3,40	5,00	5,60	10,00	18,00

Hot-dip galvanized wedge socket

No. 537 Hot-dip galvanized wedge socket

acc. to DIN 43148 or size 16 - 17 mm or bigger rope diameter acc. to EN 13411-6.
Case and wedge sizes 2 - 3 till 12 - 15 mm rope diameter malleable cast iron. Case and wedge sizes 16 - 17 till 26 - 30 mm rope diameter cast iron. Bolt made of steel, splint-pin made of copper. Sizes 2 - 3, 4 - 5 and 12 - 15 mm rope diameter are not acc. to DIN 43148. All dimensions in mm.

Rope diameter	2 - 3	4 - 5	6 - 7	8	9 - 12	10 - 12	12 - 14
a	8	12	14	14	14	17	17
b	15	23	26	26	26	31	31
c	16,5	27,5	39	39	39	47	47
d	7,5	12	14	14	14	17	17
e	16	31	35	35	35	37	37
f	13	23	30	30	30	32	32
g	27	37	61,5	61,5	61,5	66	66
h	66	108	150	150	150	163	163
k	37	67	85	81	76	81	76
m	12,5	16	30	24	20	24	20
Identifying holes	0	0	3	2	1	2	1
Loading capacity in kg	50	250	500	500	500	1000	1000
Weight in kg about	0,07	0,33	0,80	0,80	0,82	1,13	1,13

Rope diameter	12 - 15	16 - 17	18	19 - 20	21	22 - 25	26 - 30
a	20	24	24	29	30	30	37
b	40	52	52	63	66	66	91
c	65	89	89	97	124	124	135
d	20	25	25	25	33,5	33,5	48,5
e	54	76	76	77	80	80	112
f	44	54	54	67	69	69	82
g	99	138	138	138	175	175	199
h	220	275	275	276	370	370	486
k	112	148	136	161	218	190	212
m	36	56	49	52	80	78	88
Identifying holes	0	0	0	0	0	0	0
Loading capacity in kg	2500	5500	5500	8000	10000	10000	12000
Weight in kg about	2,25	4,85	5,66	7,60	11,96	11,60	27,40

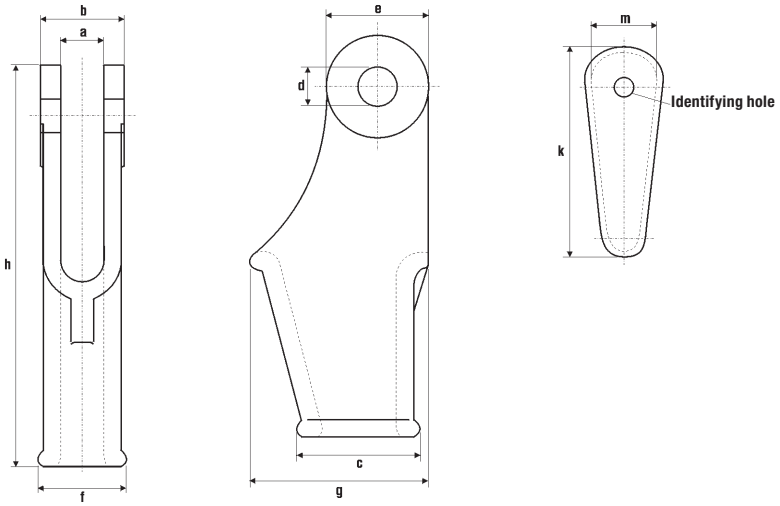

No. 545 Galvanized wire rope grips

acc. to EN 13411-5-1 (former DIN 1142), for rope connections to meet safety requirements, body made of malleable cast iron GTW 40 acc. to DIN 1692, U-bolt and collar nut acc. to DIN 267.
All dimensions in mm.

Rope diameter	5	6,5	8	10	12	13	14
Size of U-bolt/tread	M 5	M 6	M 8	M 8	M 10	M 12	M 12
Length of thread	13	17	20	24	27	30	30
Overall length	25	32	41	46	57	64	67
Clear width	7	9	11	13	15	17	17
Weight in kg about	0,02	0,04	0,08	0,09	0,24	0,27	0,28

Rope diameter	16	19	22	26	30	34	40
Size of U-bolt/tread	M 14	M 14	M 16	M 20	M 20	M 22	M 24
Length of thread	35	36	40	50	55	60	65
Overall length	76	83	96	118	131	150	167
Clear width	19	24	28	28	35	38	45
Weight in kg about	0,43	0,49	0,68	1,17	1,40	2,13	2,68

Rope grips
made of stainless steel

No. 1310 Rope grips made of stainless steel

made of material AISI 316, polished, acc. to DIN 741.
All dimensions in mm.

Rope diameter Size of U-bolt/tread	**2** M 3	**3** M 3	**4** M 4	**5** M 5	**6** M 6	**8** M 6	**10** M 8	**13** M 10	**16** M 10	**19** M 12	**22** M 12	**26** M 14
Overall length	18	22	23	28	33	36	45	55	66	67	84	96
Clear width	4	5	6	7	8	11	13	15	18	21	24	27
Weight per 100 pieces in kg about	1,20	1,40	1,50	1,60	2,10	4,10	6,80	13,00	21,00	28,00	40,00	44,00

No. 1314 a Simplex wire rope grips made of stainless steel

box-type, two-piece, made of material A4, high gloss polished.
All dimensions in mm.

Rope diameter Overall length	**2** 15	**3** 17	**4** 20	**5** 25	**6** 30	**8** 37
Size of thread	M 4	M 4	M 5	M 5	M 6	M 8
Overall depth	14	14	18	18	23	25
Weight per 100 pieces in kg about	0,46	0,72	1,27	1,46	2,52	5,42

No. 1314 b Duplex wire rope grips made of stainless steel

box-type, two-piece, made of material A4, high gloss polished.
All dimensions in mm.

Rope diameter Overall length	**2** 30	**3** 35	**4** 40	**5** 50	**6** 60	**8** 75	**10** 95
Size of thread	M 4	M 4	M 5	M 5	M 6	M 8	M 10
Overall depth	14	14	18	18	23	25	32
Weight per 100 pieces in kg about	0,97	1,41	2,45	2,91	5,00	10,63	17,13

Rope fittings

Product								Page
Manila rope thimble No. 502								7.02
Wire rope thimble No. 503 acc. to DIN 6899 BF								7.03
Shackle No. 504 acc. to DIN 82101								7.04
Shackle No. 505 in commercial design								7.05
Swivel No. 514 a with swivel oval eyes								7.06
Swivel No. 514 b with eye and hook								7.07
Swivel No. 514 c with eye and lifting hook DIN 15401								7.08
Swivel No. 514 e with eye and double hook								7.09
Turnbuckle No. 519 a acc. to DIN 1480, with 2 stub ends								7.10
Turnbuckle No. 519 b acc. to DIN 1480, hook/eye								7.11
Turnbuckle No. 519 c acc. to DIN 1480, hook/hook								7.12
Turnbuckle No. 519 d acc. to DIN 1480, eye/eye								7.12
Turnbuckle No. 520 acc. to DIN 82004 Form A								7.13
Turnbuckle No. 521 double lugs on both sides								7.14
Galvanized quick link No. 539 acc. to DIN 56927								7.15
Lifting eye bolt No. 542 acc. to DIN 580								7.16

Product								Page
Lifting eye nut No. 543 acc. to DIN 582								7.17
Solid thimble No. 544 acc. to DIN 3091								7.18
Shackle high-tensile No. 548 straight form								7.19
Shackle high-tensile No. 549 curved form								7.20
Thimbles No. 1320 made of stainless steel								7.21
Turnbuckles No. 1340 b made of stainless steel similar DIN 1480, hook/eye								7.22
Turnbuckles No. 1340 c made of stainless steel similar DIN 1480, hook/hook								7.22
Turnbuckles No. 1340 d made of stainless steel acc. to DIN 1480, eye/eye								7.23
Shackle No. 1350 made of stainless steel								7.24

Rope fittings

07

Galvanized manila rope thimbles

No. 502 Galvanized manila rope thimbles

All dimensions in mm.

Groove width	8	10	12	14	16	18
Clear width	16	19	22	24	26	30
Clear height	27	30	36	36	39	47
Overall length	43	50	55	60	66	77
Material thickness groove base	1	1	2	2	3	3
Weight per 100 pieces in kg about	1,08	1,70	3,00	3,50	8,00	12,60

Groove width	20	22	25	30	35	38
Clear width	35	38	45	55	55	55
Clear height	58	67	71	91	91	91
Overall length	91	100	115	140	140	140
Material thickness groove base	3	3	3	3	3	4
Weight per 100 pieces in kg about	16,00	24,00	25,00	43,00	45,00	55,00

No. 503 Galvanized wire rope thimbles

acc. to DIN 6899 BF.

All dimensions in mm.

Groove width for rope diameter	**3** 2,5	**4** 3,5	**5** 4	**6** 5	**8** 7	**10** 9	**12** 11
Clear width	12	13	14	16	20	24	28
Clear height	19	21	23	25	32	38	45
Overall length	29	30	33	39	58	59	68
Material thickness groove base	1,2	1,2	1,7	2,2	2,7	2,9	3,2
Weight per 100 pieces in kg about	0,50	0,80	1,00	1,60	3,00	4,70	6,80

Groove width for rope diameter	**14** 13	**16** 15	**18** 16	**20** 18	**22** 20	**24** 22	**26** 24
Clear width	32	36	40	45	50	56	62
Clear height	51	58	64	72	80	90	99
Overall length	83	90	92	110	120	130	153
Material thickness groove base	3,5	3,8	4,2	5,2	5,2	6,2	6,5
Weight per 100 pieces in kg about	10,00	14,50	20,00	29,00	32,00	47,00	59,00

Groove width for rope diameter	**28** 26	**30** 28	**32** 30	**34** 32	**36** 34	**38** 36	**42** 40
Clear width	70	75	80	95	100	110	120
Clear height	112	120	128	152	160	176	192
Overall length	167	186	195	225	230	236	276
Material thickness groove base	7,3	8,0	8,0	8,0	8,0	8,5	10,5
Weight per 100 pieces in kg about	80,00	110,00	123,00	156,00	170,00	192,00	320,00

Please specify in order:

A = with jack ring

C = with protruding bolt, nut and splint-pin (only from size 0,4 on)

No. 504 Galvanized shackles

acc. to DIN 82101.

All dimensions in mm.

Nominal size Bolt diameter	**0,1** 5	**0,16** 6	**0,25** 8	**0,4** 10	**0,6** 12	**1** 16	**1,6** 20
Inside length	15,5	18	24	30	36	49	61
Inside width at pin	7	8	11	14	17	21	27
Bow material diameter	4	5	7	8	10	13	17
Loading capacity in kg	100	160	250	400	630	1000	1600
Weight in kg about	0,02	0,02	0,05	0,09	0,17	0,36	0,75

Nominal size Bolt diameter	**2** 22	**2,5** 24	**3** 27	**4** 30	**5** 36	**6** 39	**8** 45
Inside length	67	73	83,5	91	111	119,5	139,5
Inside width at pin	30	33	38	42	47	53	60
Bow material diameter	19	21	24	27	30	34	38
Loading capacity in kg	2000	2500	3150	4000	5000	6300	8000
Weight in kg about	1,00	1,32	1,85	2,50	4,00	5,40	7,90

Nominal size Bolt diameter	**10** 48	**12** 52	**16** 60	**20** 68	**25** 72
Inside length	147	158	185	211	221
Inside width at pin	66	73	81	90	100
Bow material diameter	42	47	52	58	63
Loading capacity in kg	10000	12500	16000	20000	25000
Weight in kg about	10,00	13,50	19,20	28,00	34,00

Please specify in order:

A = chain type

B = bow type

No. 505 Forged shackles

with screw pin, galvanized.
All dimensions in mm.

Bow material diameter in inches Bolt diameter	**3/16** 5	**1/4** 6	**5/16** 8	**3/8** 10	**7/16** 11	**1/2** 12	**9/16** 14
Inside length	20	24	32	40	44	48	56
Inside width at bow (design B)	15	16	23	29	33	35	41
Inside width at pin	10	12	16	20	22	24	28
Bow material diameter	5	6	8	10	11	12	14
Loading capacity in kg	100	125	250	300	400	500	600
Weight in kg about	0,02	0,03	0,07	0,13	0,17	0,24	0,35

Bow material diameter in inches Bolt diameter	**5/8** 16	**3/4** 19	**7/8** 22	**1** 25	**1.1/8** 28	**1.1/4** 32	**1.1/2** 38
Inside length	64	76	88	100	102	113	135
Inside width at bow (design B)	45	55	64	70	82	93	112
Inside width at pin	32	38	44	50	56	63	74
Bow material diameter	16	19	22	25	28	32	38
Loading capacity in kg	800	1100	1500	2100	3000	3500	5000
Weight in kg about	0,50	0,80	1,30	2,00	3,00	4,30	6,80

No. 514 a Swivels

with integrated tapered roller bearing, grey coated, two swivel oval eyes No. 534 acc. to DIN 82006.
All dimensions in mm.

Loading capacity in kg	1000	2000	3000	5000	6300
a	48	58	72	94	108
b	21	26	32	40	45
d	60	70	75	90	100
l	250	300	375	460	535
p	226	264	329	404	471
Weight in kg about	2,50	4,00	5,00	10,00	13,00

Loading capacity in kg	8000	10000	12500	16000	20000
a	115	125	144	163	173
b	49	54	60	66	72
d	120	130	150	160	190
l	580	640	720	800	885
p	510	562	632	702	777
Weight in kg about	19,00	24,00	34,00	48,00	80,00

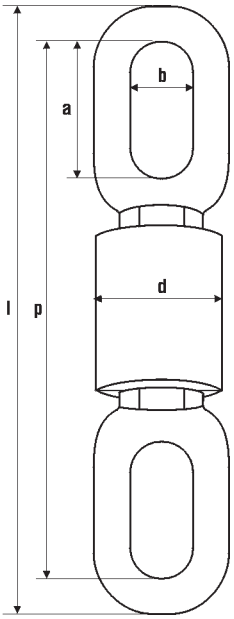

No. 514 b Swivels

with integrated tapered roller bearing, grey coated, with swivel oval eye No. 534 acc. to DIN 82006 and eye hook.
All dimensions in mm.

Loading capacity in kg	1000	2000	3000	5000	8000	10000
a	48	58	72	94	115	125
b	21	26	32	40	49	54
d	60	70	75	90	120	130
i	9	10	12	16	20	24
l	350	375	435	560	665	740
m	27	29	34	45	60	56
p	305	321	368	481	572	630
q	198	210	247	312	390	428
z	189	200	236	298	377	413
Weight in kg about	3,50	5,30	8,00	13,00	26,00	31,00

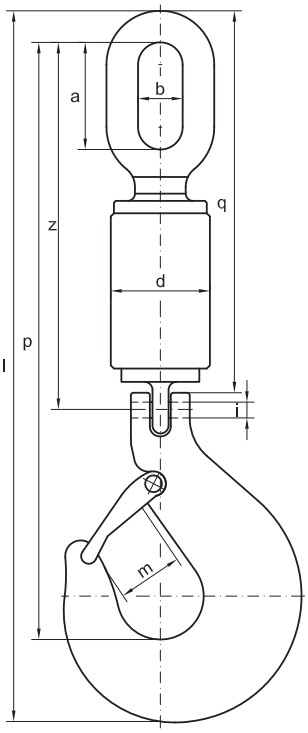

No. 514 c Swivels

with integrated tapered roller bearing, grey coated, with oval eye No. 534 acc. to DIN 82006, and lifting hook No. 535 c acc. to DIN 15401 with safety catch.
All dimensions in mm.

Loading capacity in kg	500	1000	2000	3000	4000	5000
a	48	48	58	72	94	94
b	21	21	26	32	40	40
d	60	60	70	75	90	90
l	320	350	380	450	530	530
m	25	28	34	40	41	41
p	272	307	322	379	444	444
Weight in kg about	2,50	3,50	5,30	8,00	13,00	13,00

Loading capacity in kg	6300	8000	10000	12500	16000	20000
a	108	115	125	144	163	173
b	45	49	54	60	66	72
d	90	120	130	150	160	190
l	580	630	700	805	890	975
m	41	49	55	59	69	76
p	490	528	586	676	746	815
Weight in kg about	14,00	26,00	31,00	47,00	64,00	90,00

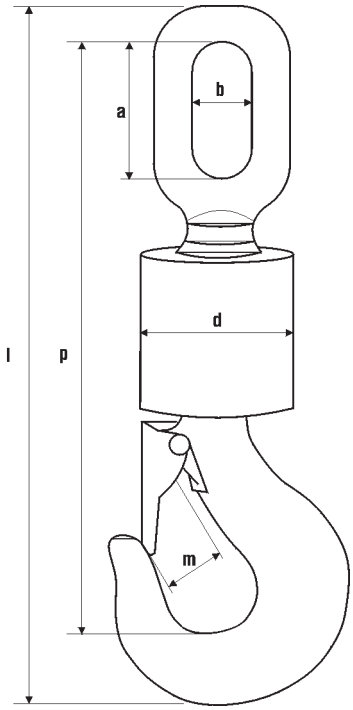

No. 514 e Swivels

with integrated tapered roller bearing, grey coated, with oval eye No. 534 acc. to DIN 82006, and swivel double lug acc. to DIN 82008 with bolt.
All dimensions in mm.

Loading capacity in kg	2000	3000	5000	6300	8000	10000
a	48	72	94	108	115	125
b	21	32	40	45	49	54
d	72	76	92	104	120	132
g	54	58	66	75	82	88
i	29	33	43	47	52	52
l	285	330	415	480	520	560
p	227	275	369	405	437	471
u	24	26	30	35	38	40
v	55	57	72	82	91	90
Weight in kg about	6,00	7,00	11,00	13,00	22,00	26,00

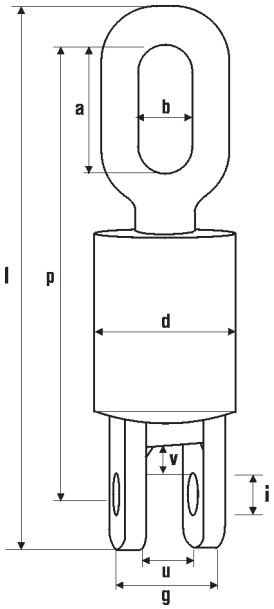

No. 519 a Galvanized turnbuckles

acc. to DIN 1480 with 2 stub ends.
All dimensions in mm.

Size of thread Length of turnbuckle frame	**M 6** 110	**M 8** 110	**M 10** 125	**M 12** 125	**M 14** 140	**M 16** 170
Overall length	240 - 320	240 - 315	300 - 385	300 - 380	330 - 420	400 - 510
Adjustable	80	75	85	80	90	110
Length of stub end	120	120	150	150	165	200
Length of frame thread	12	15	18	21	24	27
Thread length of the stub end	65	65	75	75	85	100
Weight in kg about	0,10	0,14	0,28	0,40	0,66	0,89

Size of thread Length of turnbuckle frame	**M 20** 200	**M 22** 220	**M 24** 255	**M 30** 255	**M 36** 295
Overall length	440 - 570	440 - 585	520 - 690	520 - 680	600 - 780
Adjustable	130	145	170	160	180
Length of stub end	220	220	260	260	300
Length of frame thread	34	37	39	45	55
Thread length of the stub end	120	130	150	160	180
Weight in kg about	1,60	2,27	2,82	4,23	7,07

No. 519 b Galvanized turnbuckles

acc. to DIN 1480 hook/eye.
All dimensions in mm.

Size of thread Length of turnbuckle frame	**M 6** 110	**M 8** 110	**M 10** 125	**M 12** 125	**M 14** 140	**M 16** 170
Overall length	172 - 252	182 - 257	213 - 298	238 - 318	263 - 353	320 - 430
Hook opening width	8,5	11	13,5	15,5	18,5	19
Inside diameter eye	9	10	14	16	18	22
Adjustable	80	75	85	80	90	110
Length of frame thread	12	15	18	21	24	27
Weight in kg about	0,10	0,16	0,29	0,43	0,62	0,92

Size of thread Length of turnbuckle frame	**M 20** 200	**M 22** 220	**M 24** 255	**M 30** 255	**M 36** 295
Overall length	367 - 497	398 - 543	447 - 617	512 - 662	568 - 748
Hook opening width	20,5	26	26	33	44
Inside diameter eye	24	27	27	31	43
Adjustable	130	145	170	150	180
Length of frame thread	34	37	39	45	55
Weight in kg about	1,60	2,20	3,00	4,60	7,70

No. 519 c Galvanized turnbuckles

acc. to DIN 1480 hook/hook.
All dimensions in mm.

Size of thread Length of turnbuckle frame	**M 6** 110	**M 8** 110	**M 10** 125	**M 12** 125	**M 14** 140	**M 16** 170
Overall length	180 - 260	195 - 270	230 - 315	250 - 330	280 - 370	320 - 430
Hook opening width	8,5	11	13,5	15,5	18,5	19
Adjustable	80	75	85	80	90	110
Length of frame thread	12	15	18	21	24	27
Weight in kg about	0,10	0,17	0,30	0,44	0,67	0,95

Size of thread Length of turnbuckle frame	**M 20** 200	**M 22** 220	**M 24** 255	**M 30** 255	**M 36** 295
Overall length	400 - 530	428 - 573	490 - 660	530 - 690	600 - 780
Hook opening width	20,5	26	26	33	44
Adjustable	130	145	170	160	180
Length of frame thread	34	37	39	45	55
Weight in kg about	1,75	2,40	3,22	4,88	8,27

No. 519 d Galvanized turnbuckles

acc. to DIN 1480 eye/eye.
All dimensions in mm.

Size of thread Length of turnbuckle frame	**M 6** 110	**M 8** 110	**M 10** 125	**M 12** 125	**M 14** 140	**M 16** 170
Overall length	167 - 247	179 - 254	210 - 295	230 - 310	250 - 340	330 - 440
Inside diameter eye	9	10	14	16	18	22
Adjustable	80	75	85	80	90	110
Length of eye piece	80	84	105	115	122	165
Length of frame thread	12	15	18	21	24	27
Weight in kg about	0,10	0,16	0,27	0,41	0,60	1,00

Size of thread Length of turnbuckle frame	**M 20** 200	**M 22** 220	**M 24** 255	**M 30** 255	**M 36** 295
Overall length	335 - 465	368 - 513	420 - 590	510 - 670	560 - 740
Inside diameter eye	24	27	27	31	37
Adjustable	130	145	170	160	180
Length of eye piece	167	167	205	255	276
Length of frame thread	34	37	39	45	55
Weight in kg about	1,54	2,00	2,70	4,35	7,25

No. 520 Galvanized turnbuckles

acc. to DIN 82004 with oval eyes (Type A), drop-forged, made of material S355J2.
All dimensions in mm.

Nominal size Size of thread	**0,4** M 12	**0,6** M 16	**1** M 18	**1,6** M 22	**2** M 24
Length of turnbuckle frame	180	200	220	240	260
Overall length	406 - 531	487 - 622	522 - 672	584 - 739	618 - 796
Clear eye dimensions	29 x 13	48 x 21	48 x 21	58 x 26	58 x 26
Adjustable	125	135	150	155	178
Frame bore diameter	12	12	12	14	14
Loading capacity in kg	400	630	1000	1600	2000
Weight in kg about	0,65	1,20	1,50	2,30	2,90

Nominal size Size of thread	**2,5** M 27	**3** M 30	**4** M 33	**5** M 36	**6** M 42
Length of turnbuckle frame	280	300	320	340	380
Overall length	692 - 921	725 - 920	806 - 1013	848 - 1065	944 - 1186
Clear eye dimensions	72 x 32	72 x 32	94 x 40	94 x 40	108 x 45
Adjustable	185	195	207	217	242
Frame bore diameter	14	18	18	18	22
Loading capacity in kg	2500	3200	4000	5000	6300
Weight in kg about	4,40	5,30	8,10	9,50	13,50

Nominal size Size of thread	**8** M 45	**10** M 52	**12** M 56	**16** M 64
Length of turnbuckle frame	420	460	500	540
Overall length	1038 - 1315	1120 - 1405	1241 - 1556	1362 - 1697
Clear eye dimensions	115 x 49	125 x 54	144 x 60	163 x 66
Adjustable	277	285	315	335
Frame bore diameter	22	22	26	26
Loading capacity in kg	8000	10000	12500	16000
Weight in kg about	18,00	24,00	31,00	44,00

Galvanized turnbuckles

No. 521 Galvanized turnbuckles

double lug, bolt and nut both sides, as well as turnbuckle bodies made of steel tube in acc. to DIN 1478.
All dimensions in mm.

Size of thread Double lug tread	**M 8** M 6	**M 10** M 8	**M 12** M 10	**M 16** M 16	**M 20** M 20	**M 24** M 24	**M 30** M 30
Length of turnbuckle frame	110	125	125	170	200	255	255
Overall length	205 - 290	250 - 340	300 - 390	340 - 465	455 - 605	550 - 730	665 - 845
Clear width of double lug	8	10	14	20	28	33	44
Clear height of double lug	15	21	19	24	47	53	74
Adjustable	85	90	90	125	150	180	180
Frame bore diameter	8	8	10	10	12	12	16
Loading capacity in kg	330	530	770	1500	3000	5500	8000
Weight in kg about	0,26	0,45	0,66	1,51	2,93	5,00	9,97

No. 539 A Galvanized quick links

acc. to DIN 56927, with coupling nut, narrow mouth, stamped capacity, safety factor 10, used for example for stage and theater purposes.
All dimensions in mm.

Material diameter Clear width	**4** 11,5	**5** 13	**6** 14,5	**8** 17,5	**10** 20,5	**12** 23,5
Clear height	31,5	39,5	45	58	69	80,5
Nuts height	12,5	16	19	24	29	33
Opening width	5,5	6,5	7,5	11	12	15
Loading capacity in kg	90	140	200	350	550	750
Weight per 100 pieces in kg about	1,18	2,05	3,50	7,85	14,56	23,47

No. 539 B Galvanized quick links

acc. to DIN 56927, with coupling nut, wide mouth, stamped capacity, safety factor 10, used for example for stage and theater purposes.
All dimensions in mm.

Material diameter Clear width	**4** 11,5	**5** 13	**6** 14,5	**8** 17,5	**10** 20,5	**12** 23,5
Clear height	45	52	58,5	72	85,5	100
Nuts height	19	22	25	31,5	36	43
Opening width	11,5	13	14,5	17,5	20,5	23,5
Loading capacity in kg	90	140	200	350	550	750
Weight per 100 pieces in kg about	1,50	2,50	4,30	11,00	17,20	27,50

Lifting eye bolt

Please specify in order:
B = galvanized
C = stainless steel

No. 542 Lifting eye bolt

acc. to DIN 580 made of material C 15 E, drop-forged.
All dimensions in mm.

Size of thread M Size of thread inches	**M 8** 5/16	**M 10** 3/8	**M 12** 1/2	**M 16** 5/8
f	20	25	30	35
g	36	45	54	63
h	36	45	53	62
l	49	62	73,5	89
s	8	10	12	14
w	20	25	30	35
z	13	17	20,5	27
Loading capacity / vertical pull in kg	140	230	360	700
Weight in kg about	0,06	0,11	0,18	0,28

Size of thread M Size of thread inches	**M 20** 3/4	**M 22** 7/8	**M 24** 1	**M 30** 1
f	40	45	50	65
g	72	81	90	108
h	71	80,5	90	109
l	101	115,5	126	154
s	16	18	20	24
w	40	45	50	60
z	30	35	36	45
Loading capacity / vertical pull in kg	1200	1200	1800	3200
Weight in kg about	0,45	0,67	0,87	1,66

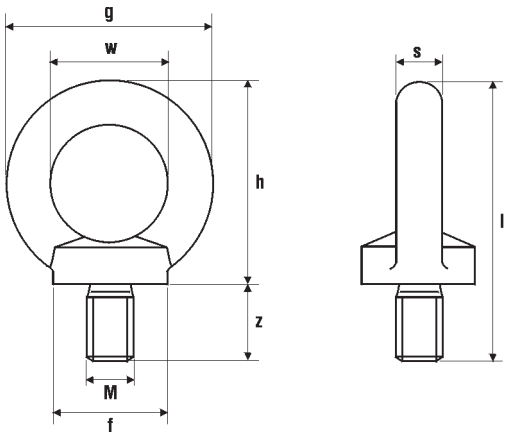

Please specify in order:

B = galvanized

C = stainless steel

No. 543 Lifting eye nuts

acc. to DIN 582 made of material C 15 E, drop-forged.
All dimensions in mm.

Size of thread M Size of thread inches	**M 8** 5/16	**M 10** 3/8	**M 12** 1/2	**M 16** 5/8
f	20	25	30	35
g	36	45	54	63
l	36	45	53	62
s	8	10	12	14
w	20	25	30	35
Loading capacity / vertical pull in kg	140	230	340	700
Weight in kg about	0,05	0,09	0,16	0,24

Size of thread M Size of thread inches	**M 20** 3/4	**M 22** 7/8	**M 24** 1	**M 30** 1
f	40	45	50	65
g	72	81	90	108
l	71	80,5	90	109
s	16	18	20	24
w	40	45	50	60
Loading capacity / vertical pull in kg	1200	1200	1800	3200
Weight in kg about	0,36	0,58	0,72	1,32

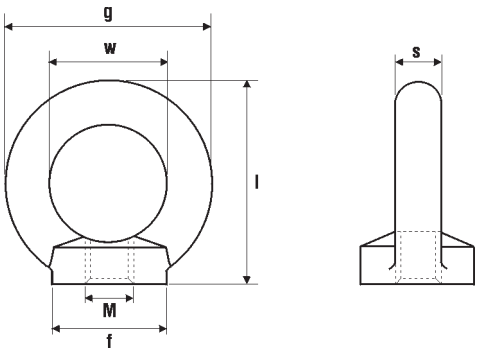

Solid thimbles for wire ropes

Please specify in order:
A = not machined
B = bored

No. 544 Solid thimbles for wire ropes

acc. to DIN 3091. Material: nominal size 8 - 36 made of GTW 40 acc. to DIN 1692 and nominal size 40 - 80 made of GGG 40 acc. to DIN 1693, nominal size 8 - 14 without triangle hole.
All dimensions in mm.

Nominal size Groove width	**8** 9	**10** 11	**12** 13	**14** 16	**16** 18	**18** 20	**20** 22
Thimble thickness	15	17,5	20	23,5	26	28,5	31
Thimble width	40	50	60	70	80	90	100
Thimble length	66	82	98	114	130	145	161
Bore not machined	14	18	21	25	28	31	35
Bore diameter max.	20	25	30	35	40	45	50
Weight in kg about	0,20	0,30	0,50	0,70	0,80	1,10	1,40

Nominal size Groove width	**22** 24	**24** 26	**26** 29	**28** 31	**32** 35	**36** 40	**40** 44
Thimble thickness	33,5	36	39,5	42	47	53	58
Thimble width	110	120	130	140	160	180	200
Thimble length	177	193	209	224	256	288	320
Bore not machined	38	41	44	47	53	59	65
Bore diameter max.	55	60	65	70	80	90	100
Weight in kg about	1,80	2,30	3,00	3,70	5,30	7,50	10,40

Nominal size Groove width	**44** 48	**48** 53	**52** 57	**56** 62	**64** 70	**72** 79	**80** 88
Thimble thickness	63	69	74	80	90	101	112
Thimble width	220	240	260	280	320	360	400
Thimble length	352	384	416	448	512	576	640
Bore not machined	70	76	81	86	95	104	112
Bore diameter max.	110	120	130	140	160	180	200
Weight in kg about	13,40	17,80	23,10	29,00	41,30	66,00	99,00

If on customers request the thimbles shall be bored to a diameter larger than the indicated max. diameter, we do not give a warranty for that.

High-tensile shackles

chain type

Please specify in order:

A = with screw pin

B = with threaded bolt, nut and splint-pin

No. 548 High-tensile shackles

galvanized, with coated bolt, marked loading capacity and nominal size.
All dimensions in mm.

Bow material diameter in inches Loading capacity in kg	**1/4** 500	**5/16** 750	**3/8** 1000	**7/16** 1500	**1/2** 2000	**5/8** 3250	**3/4** 4750
Inside length	22	26	31	36	41	51	59
Inside width	12	13	16	18	21	27	32
Bolt diameter in inches	5/6	3/8	7/16	1/2	5/8	3/4	7/8
Bolt diameter metric	8	10	11	13	16	19	22
Outside diameter of bore eye	17	21	25	27	30	40	48
Weight of design A in kg about	0,06	0,08	0,13	0,19	0,31	0,55	0,96
Weight of design B in kg about	-	-	-	-	0,34	0,70	1,18

Bow material diameter in inches Loading capacity in kg	**7/8** 6500	**1** 8500	**1.1/8** 9500	**1.1/4** 12000	**1.3/8** 13500	**1.1/2** 17000	**1.3/4** 25000
Inside length	71	81	90	94	113	124	146
Inside width	36	43	46	51	57	60	73
Bolt diameter in inches	1	1.1/8	1.1/4	1.3/8	1.1/2	1.5/8	2
Bolt diameter metric	25	28	32	35	38	42	50
Outside diameter of bore eye	54	60	67	76	84	92	110
Weight of design A in kg about	1,40	2,03	2,97	4,01	5,40	7,29	11,25
Weight of design B in kg about	1,64	2,41	3,27	4,59	6,00	8,33	12,83

Bow material diameter in inches Loading capacity in kg	**2** 35000	**2.1/2** 55000	**3** 85000	**3.1/2** 120000	**4** 150000
Inside length	171	203	229	267	305
Inside width	83	105	125	146	165
Bolt diameter in inches	2.1/4	2.3/4	3.1/4	3.3/4	4.1/4
Bolt diameter metric	57	70	84	95	108
Outside diameter of bore eye	127	152	165	203	229
Weight of design A in kg about	16,20	37,80	-	-	-
Weight of design B in kg about	18,50	41,05	62,20	98,10	139,50

Test load = twice loading capacity
Breaking load = six times loading capacity for shackles with a loading capacity of 2 t up to 30 t
five times loading capacity for shackles with a loading capacity of 50 t and higher

Compared with shackles made of normal steel, high-tensile shackles have got a considerably lower own weight.

High-tensile shackles

bow typ

Please specify in order:

A = with screw pin

B = with threaded bolt, nut and splint-pin

No. 549 High-tensile shackles

galvanized, with coated bolt, marked with loading capacity and nominal size.
All dimensions in mm.

Bow material diameter in inches Loading capacity in kg	**1/4** 500	**5/16** 750	**3/8** 1000	**7/16** 1500	**1/2** 2000	**5/8** 3250	**3/4** 4750
Inside length	28	31	36	42	48	60	71
Inside width at bow	20	21	26	29	33	43	51
Inside width at pin	12	13	16	18	21	27	32
Bolt diameter in inches	5/16	3/8	7/16	1/2	5/8	3/4	7/8
Bolt diameter metric	8	10	11	13	16	19	22
Outside diameter of bore eye	17	21	25	27	30	40	48
Weight of design A in kg about	0,05	0,08	0,14	0,22	0,33	0,65	0,97
Weight of design B in kg about	0,07	0,10	0,15	0,26	0,37	0,71	1,27

Bow material diameter in inches Loading capacity in kg	**7/8** 6500	**1** 8500	**1.1/8** 9500	**1.1/4** 12000	**1.3/8** 13500	**1.1/2** 17000	**1.3/4** 25000
Inside length	83	95	108	115	133	146	178
Inside width at bow	58	68	74	82	92	98	127
Inside width at pin	36	43	46	51	57	60	73
Bolt diameter in inches	1	1.1/8	1.1/4	1.3/8	1.1/2	1.5/8	2
Bolt diameter metric	25	28	32	35	38	42	50
Outside diameter of bore eye	54	60	67	76	84	92	110
Weight of design A in kg about	1,52	2,39	3,15	4,32	5,67	7,79	12,51
Weight of design B in kg about	1,78	2,52	3,53	5,04	6,84	8,78	14,09

Bow material diameter in inches Loading capacity in kg	**2** 35000	**2.1/2** 55000	**3** 85000	**3.1/2** 120000	**4** 150000	**4.3/8** 175000
Inside length	197	260	329	380	400	464
Inside width at bow	146	184	200	230	260	290
Inside width at pin	83	105	125	135	140	184
Bolt diameter in inches	2.1/4	2.3/4	3.1/4	3.3/4	4.1/4	5.1/8
Bolt diameter metric	57	70	84	95	108	130
Outside diameter of bore eye	127	152	165	203	229	262
Weight of design A in kg about	18,50	37,85	-	-	-	-
Weight of design B in kg about	20,84	41,05	62,20	110,00	160,00	236,25

Test load = twice loading capacity
Breaking load = six times loading capacity for shackles with a loading capacity of 2 t up to 30 t
five times loading capacity for shackles with a loading capacity of 50 t and higher

Compared with shackles made of normal steel, high-tensile shackles have got a considerably lower own weight.

No. 1320 Thimbles made of stainless steel

made of material A4, high gloss polished.
All dimensions in mm.

Groove width Clear width	**3** 10	**4** 11	**5** 13	**6** 16	**7** 18
Clear height	14	17	20	25	28
Weight per 100 pieces in kg about	0,30	0,41	0,52	0,90	1,08

Groove width Clear width	**8** 20	**10** 26	**12** 28	**14** 34	**16** 37
Clear height	32	40	42	54	60
Weight per 100 pieces in kg about	1,60	2,50	3,80	6,80	8,50

Groove width Clear width	**18** 42	**20** 45	**22** 50	**24** 58	**26** 65
Clear height	62	75	88	90	100
Weight per 100 pieces in kg about	14,50	18,30	19,50	37,60	41,00

Turnbuckles

made of stainless steel

No. 1340 b Turnbuckles made of stainless steel

made of material A4, high gloss polished, similar to DIN 1480, with hook and eye.
All dimensions in mm.

Size of thread Length of turnbuckle frame	**M 5** 70	**M 6** 90	**M 8** 120	**M 10** 150	**M 12** 200	**M 16** 250
Overall length	120 - 165	172 - 242	182 - 252	213 - 293	238 - 318	320 - 430
Hook opening width	6	8	9	12	13	17
Inside diameter eye	7	10	12	15	19	20
Adjustable	45	70	70	80	80	110
Weight in kg about	0,050	0,095	0,165	0,290	0,430	0,920

No. 1340 c Turnbuckles made of stainless steel

made of material A4, high gloss polished, similar to DIN 1480, with two hooks.
All dimensions in mm.

Size of thread Length of turnbuckle frame	**M 5** 70	**M 6** 90	**M 8** 120	**M 10** 150	**M 12** 200	**M 16** 250
Overall length	120 - 165	172 - 242	182 - 252	213 - 293	238 - 318	320 - 430
Hook opening width	6	8	9	12	13	17
Adjustable	45	70	70	80	80	110
Weight in kg about	0,052	0,090	0,155	0,270	0,410	1,000

No. 1340 d Turnbuckles made of stainless steel

made of material A4, high gloss polished, similar to DIN 1480, with two eyes.
All dimensions in mm.

Size of thread Length of turnbuckle frame	**M 5** 70	**M 6** 90	**M 8** 120	**M 10** 150	**M 12** 200	**M 16** 250
Overall length	120 - 165	172 - 242	182 - 252	213 - 293	230 - 310	320 - 430
Inside diameter eye	7	10	12	15	19	20
Adjustable	45	70	70	80	80	110
Length of eye piece	58	80	84	105	115	165
Weight in kg about	0,052	0,090	0,155	0,270	0,410	1,000

Please specify in order:

A = chain type

B = bow typ

No. 1350 Shackles made of stainless steel

made of material A4, high gloss polished, with jack ring.
All dimensions in mm.

Nominal size Size of thread	**4** M 4	**5** M 5	**6** M 6	**8** M 8	**10** M 10	**12** M 12	**16** M 16	**19** M 20	**22** M 22	**25** M 24
Clear height	16	20	24	32	40	48	64	76	88	100
Clear width at bow (design B)	12	15	18	24	30	36	48	60	66	75
Inside width at pin	8	10	12	16	20	24	32	38	44	50
Loading capacity in kg	160	250	340	720	1000	1500	2750	3750	4750	5750
Weight in kg about	0,01	0,02	0,03	0,06	0,13	0,20	0,48	0,84	1,27	1,84

Manually operated winches

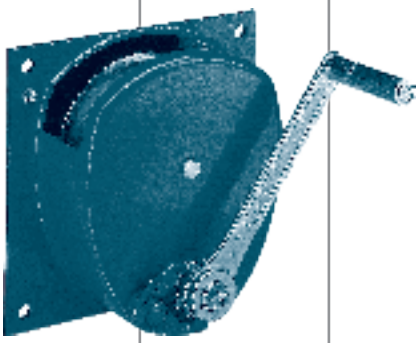

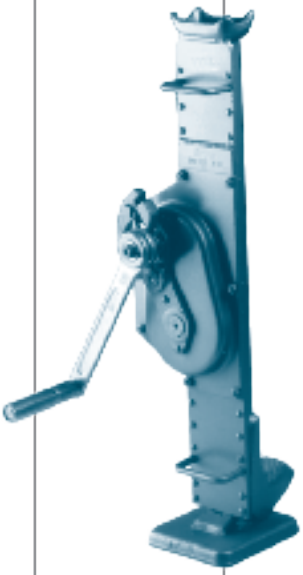

Product								Page
Steel winch No. 808 according to DIN 7355								8.02
Winch No. 812 with closed body								8.02
Aluminium wall winch No. 817								8.03
Manual winch No. 820								8.04
Bracket winch No. 823 with self-actuating load brake								8.05
Rack and pinion jack No. 832 with back plate								8.06
Rack and pinion jack No. 833 with base bracket								8.06

Manually operated winches

Please specify in order:
SK = with safety crank
RSK = with ratchet safety crank

No. 808 Steel winches with lifting body

acc. to DIN 7355, folding handle.
All dimensions in mm.

Lifting capacity of head / lifting claw in kg	1500	3000	5000	10000
Overall length	725	725	725	800
Minimum lifting claw height	70	75	70	90
Lifting height	350	350	300	300
Weight in kg about	12,00	20,00	24,00	42,00

No. 812 Hand winches

with closed body and rope fastening. Includes safety crank and folding handle. The brake automatically holds the load securely at any height and the load is lowered by turning the crank in the reverse direction. Suitable for 6 x 19 round strand rope with fibre core in accordance with DIN 3060 (treble minimum breaking load safety factor.)
All dimensions in mm.

Rope pull in first layer of rope in kg	300	500	750	1000	2000	3000
Depth including crank	270	270	300	300	550	555
Overall length	300	300	290	290	330	430
Width of back plate	200	200	290	290	220	260
Hole spacing, width	170	170	250	250	180	220
Hole spacing, hight	270	270	250	250	280	380
Screw hole diameter	13	13	15	15	17	17
Drum diameter	70	70	102	102	120	120
Internal drum width	63	63	90	90	126	126
Required pressure on crank in kg	19	21	20	18	32	30
Wire rope diameter	6	6,5	8	9	12	13
Total rope length*	11	10	12	10	8	7
Weight in kg about	10,00	10,00	14,00	15,00	23,00	32,00

*Dimensions in m.

No. 817 Winches made of Aluminium

for light loads, with closed body and detachable crank. Lifting is stopped by letting go of the crank and the load is lowered by turning the crank in the reverse direction.
All dimensions in mm.

Rope pull in first layer of rope in kg	45	100
Depth including crank	170	180
Body depth	65	80
Body width	83	94
Body height	100	150
Overall length of back plate	142	200
Width of back plate	103,5	103,5
Hole spacing, width	83	83,5
Hole spacing, height	122	180
Screw hole diameter	8	10
Lift per turn of crank for first layer of rope	100	90
Drum diameter	28,7	26
Internal drum width	19	23,5
Rope entry width	20	20
Length of crank	155	155
Required pressure on crank in kg	9	10
Wire rope diameter	3	3
Length of first layer of rope*	0,99	0,90
Total rope length*	5,2	7,15
Weight in kg about	0,95	1,96

*Dimensions in m.

Please specify in order:

A = galvanized

B = stainless steel (only size 125 kg)

No. 820 Manual winches

for light loads. Easy and space-saving mounting, safe operation. With turning and foldable (only size 125 kg) crank. For wire ropes acc. to EN 12385-4.
All dimensions in mm.

Rope pull in first layer of rope in kg	80	125
Depth including crank	220	250
Overall length	180	180
Width of back plate	70	70
Hole spacing, height	150	150
Screw hole diameter	9	9
Lift per turn of crank for first layer of rope	135	135
Drum diameter	40	40
Internal drum width	59	59
Required pressure on crank in kg	14	14
Wire rope diameter	3	4
Length of first layer of rope*	2,1	1,5
Total rope length*	20	15
Weight in kg about	2,50	2,50

*Dimensions in m.

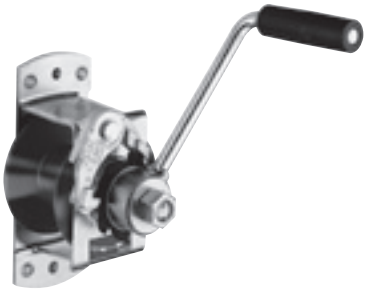

Please specify in order:

A = galvanized

B = stainless steel (made of material 1.4301)

No. 823 Bracket winches

sturdy designed and open construction, with self-actuating load brake, corrosion resistant, high rope capacity, folding crank handle.
All dimensions in mm.

Rope pull in first layer of rope in kg	300	650	1250	250	650	1000
Design	A	A	A	B	B	B
Depth including crank	285	306	320	285	306	320
Overall length	125	222	295	125	222	295
Width of back plate	170	240	320	170	240	320
Depth of back plate	107	98	98	107	98	98
Hole spacing, width	150	165	171	150	165	171
Hole spacing, depth	74	50 x 58	50	74	50 x 58	50
Screw hole diameter	11	10,5	10,5	11	10,5	10,5
Lift per turn of crank for first layer of rope	126	39	16	126	39	16
Drum diameter	36	70	75	36	70	75
Internal drum width	80	62	60	80	62	60
Required pressure on crank in kg	27	24	24	22	24	20
Wire rope diameter	4	6	8	4	7	8
Length of first layer of rope*	2,2	2,0	1,3	2,2	1,4	1,3
Total rope length*	22	23	28,5	22	16	28,5
Weight in kg about	4,00	9,00	16,00	4,00	9,30	16,00

*Dimensions in m.

No. 823/250 - 300 kg

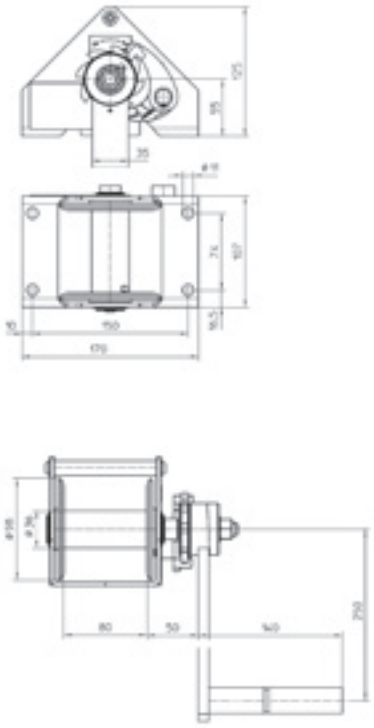

No. 823/650 kg

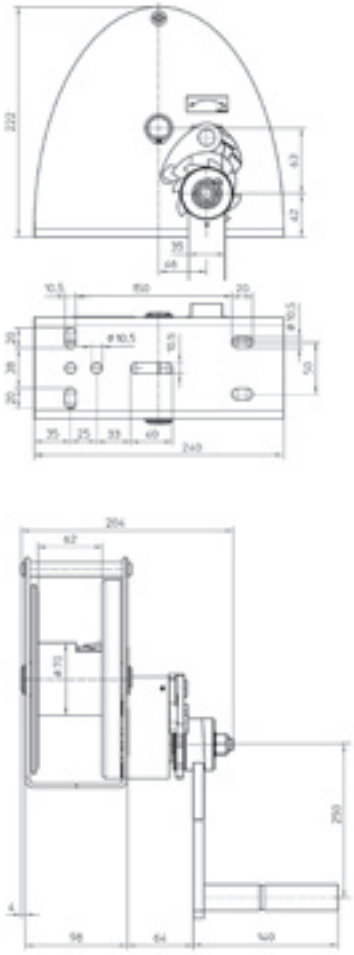

No. 823/1000 - 1250 kg

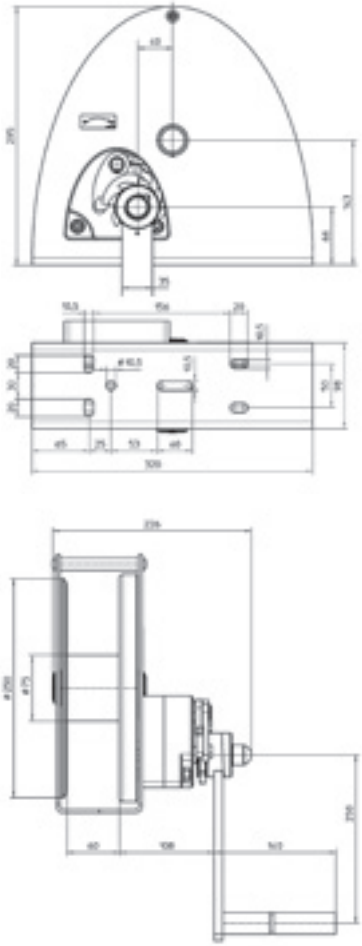

Please specify in order:

SK = with safety crank

RSK = with ratchet safety crank

No. 832 Rack and pinion jacks

with back plate, based on DIN steel jacks, with folding handle. Tooth rack can be lengthened.
All dimensions in mm.

Admissible load in kg	1500	3000	5000	10000
Overall length	1150	1260	1280	1405
Width of back plate	180	225	240	290
Height of back plate	170	170	280	360
Hole spacing, vertical	160	220	250	310
Hole spacing, horizontal	130	165	180	220
Diameter of screw hole	12,5	12,5	14,5	16,5
Lift per turn of crank	14	8	4	4
Tooth rack width	35	45	50	60
Tooth rack depth	25	30	40	50
Lift	800	800	800	800
Required pressure on crank in kg	25	25	25	50
Weight in kg about	14,00	24,00	32,00	53,00

Please specify in order:

SK = with safety crank

RSK = with ratchet safety crank

No. 833 Rack and pinion jacks

with base bracket, based on DIN steel jacks, with folding handle. Tooth rack can be lengthened.
All dimensions in mm.

Admissible load in kg	1500	3000	5000	10000
Overall length	1150	1260	1280	1405
Width of back plate	170	170	280	360
Height of back plate	100	120	150	180
Hole spacing, vertical	130	130	200	280
Hole spacing, horizontal	70	80	100	120
Diameter of screw hole	12,5	12,5	14,5	16,5
Lift per turn of crank	14	8	4	4
Tooth rack width	35	45	50	60
Tooth rack depth	25	30	40	50
Lift	800	800	800	800
Required pressure on crank in kg	25	25	25	50
Weight in kg about	14,00	24,00	32,00	53,00

Flag hoist assemblies

and pulleys

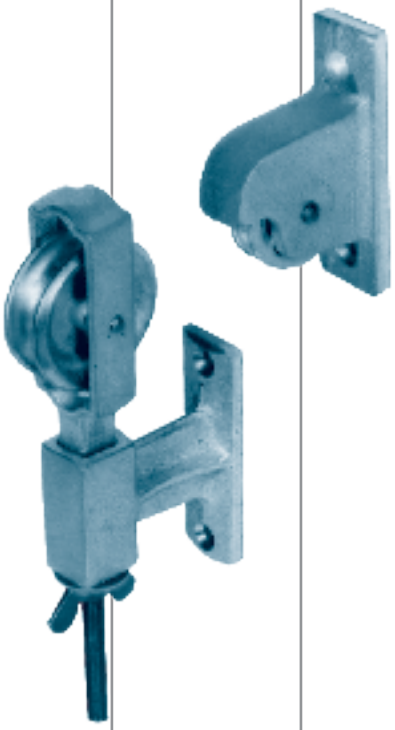

Product								Page
Flag hoist pulley No. 183 made of brass								9.02
Flag hoist pulley No. 184 made of brass								9.02
Flag tensioner No. 185 with steel rail								9.02
Flag hoist assembly No. 400 made of stainless steel								9.03

Flag hoist assemblies

Flag hoist assemblies

No. 183 Flag hoist pulley

made of brass. Fitting flag tensioner No. 185.
All dimensions in mm.

Pulley outside diameter Groove base diameter	**20** 10	**30** 22	**40** 30
Groove width	6	6	8
Groove depth	5	4	5
Size of screw-down plate	15 x 42	19 x 54	22 x 57
Diameter of screw-down hole	4,2	5,2	5,2
Hole spacing	27	40	40
for rope diameter	4	6	8
Weight in kg about	0,05	0,10	0,16

No. 184 Flag hoist pulley

made of brass. Fitting flag tensioner No. 185.
All dimensions in mm.

Pulley outside diameter Groove base diameter	**24** 16
Groove width	5
Groove depth	4
Size of screw-down plate	15 x 68
Diameter of screw-down hole	5,2
Hole spacing	55
for rope diameter	5
Weight in kg about	0,08

No. 185 Flag tensioner

made of brass. With galvanized steel rail, fitting flag hoist pulleys No. 183 and No. 184.
All dimensions in mm.

Pulley outside diameter Groove base diameter	**35** 25
Groove width	8
Groove depth	5
Size of screw-down plate	200 x 30
Diameter of screw-down hole	5
Hole spacing	160
for rope diameter	8
Weight in kg about	0,30

No. 400 Flag hoist assemblies made of stainless steel

pulleys and wing nut made of polyamide. Consisting of tensioning and fastening device, upper pulley and wire rope socket with flag becket. The three edge protection elements made of plastics are to protect the hoist rope from abrasion. If required also with hoist rope made of polyester with a diameter of 5 mm meeting all requirements: Weathering resistant, with limited extensibility, abrasionproof, and twist-free. If required also with 6 sheet metal screws made of stainless steel, suitable for flag-poles made of aluminium, steel, plastics and wood. These elements are not part of the regular equipment.

All dimensions in mm.

Upper pulley	
Pulley outside diameter	40
Groove base diameter	32
Groove width	8
Groove depth	4
Overall length	50
Width	36
Size of thread	–
Diameter of screw-down hole	4
Hole spacing	27
for rope diameter	5
Weight in kg about	0,12

Lower pulley	
Pulley outside diameter	40
Groove base diameter	32
Groove width	8
Groove depth	4
Overall length	175
Width	43
Size of thread	M 6
Diameter of screw-down hole	7,6
Hole spacing	127,4
for rope diameter	5
Weight in kg about	0,41

Hooks and oval eyes

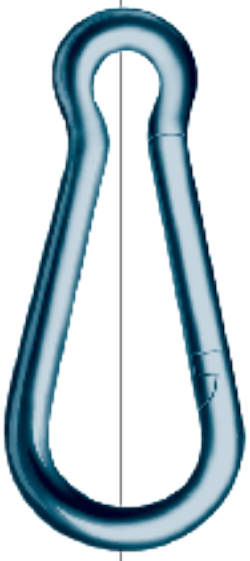

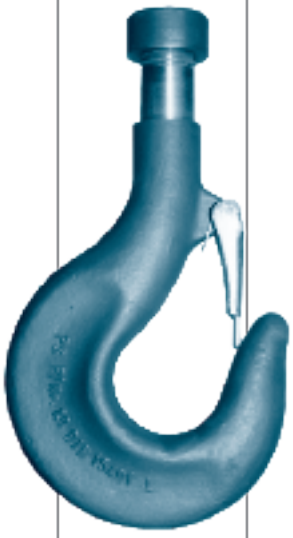

Product								Page
Snap hook No. 226								10.02
Snap hook No. 229 acc. to DIN 5290 A								10.02
Snap hook No. 245 acc. to DIN 5299 C								10.03
Eye hook No. 507 former DIN 689								10.04
Shank hook No. 511 former DIN 688								10.05
Swivel hook No. 512 with safety catch								10.06
Cargo hook No. 531 acc. to DIN 82017								10.07
Cargo hook swivel No. 532 acc. to DIN 82018								10.08
Oval eyes No. 534 acc. to DIN 82006 Type B								10.09
Shank hook No. 535 acc. to DIN 15401 RSN								10.10
Safety eye hook No. 541 acc. to DIN 7541								10.11
Tow-hook No. 546 with spring retention								10.12
Eye hook No. 547 grade 5								10.13
Snap hook No. 1360 made of stainless steel acc. to DIN 5299 C								10.14
Snap hook No. 1362 made of stainless steel with pressed-in thimble								10.14
Snap hook No. 1364 made of stainless steel with pressed-in thimble and safety nut								10.15

Hooks and oval eyes

No. 226 Snap hooks for fire brigade

with integrated thimble, galvanized.
All dimensions in mm.

l x s	60 x 6	70 x 7	80 x 8	90 x 9	100 x 10	120 x 11
f	6	7	9	10	11	15
m	8	8	9	10	11	16
Loading capacity in kg	120	180	230	250	350	450
Weight in kg about	0,031	0,050	0,072	0,103	0,138	0,202

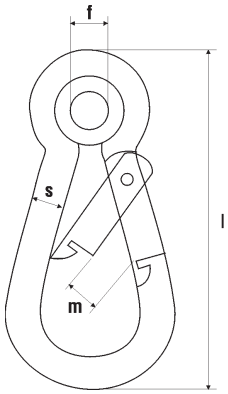

No. 229 Snap hooks made of light metal

acc. to DIN 5290 A, tumbling-polished, for safety belts acc. to DIN 7470.
All dimensions in mm.

f	22
l	135
m	20
Loading capacity in kg	1600
Weight in kg about	0,160

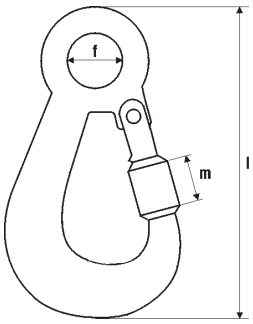

No. 245 Snap hooks for fire brigade

similar DIN 5299 C, galvanized.
All dimensions in mm.

l x s	50 x 5	60 x 6	70 x 7
e	4	6	8
f	8	9	10
m	7	8	8
Loading capacity in kg	120	120	180
Weight in kg about	0,013	0,027	0,043

l x s	80 x 8	90 x 9	100 x 10
e	8	9	10
f	12	12	15
m	10	10	11
Loading capacity in kg	230	250	350
Weight in kg about	0,064	0,088	0,126

l x s	120 x 11	140 x 12	160 x 13
e	11	14	16
f	18	20	22
m	16	19	23
Loading capacity in kg	450	510	600
Weight in kg about	0,190	0,260	0,350

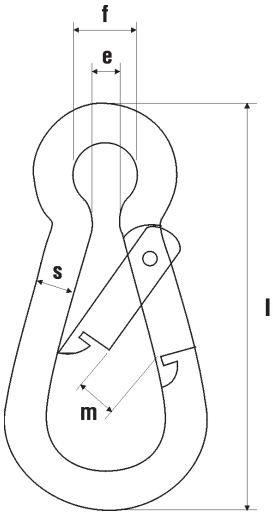

Eye hook

Please specify in order:
A = without safety catch
B = with safety catch

No. 507 Eye hooks with becket

former DIN 689, drop-forged, with safety cams, made of material S235, natural black.
All dimensions in mm.

Loading capacity in kg	250	500	1000	1600	2500
c	21,5	16	23	24	35
f	12	16	20	26	32
g	27	36	47	58	72
h	17	22,5	31	36,5	46
l	89	118	161	191	240
m	12	19	25	33	42
n	18	24	33	39	49
p	64	85	116	138	174
v	53,5	71,5	98	116	145
Weight in kg about	0,15	0,35	0,80	1,40	2,85

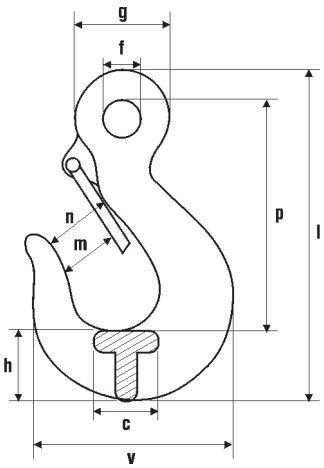

Please specify in order:

A = not machined

B = with thread and nut
C = with thread, nut and safety catch

No. 511 Shank hooks

former DIN 688, drop-forged, made of material S235, natural black, length of tread in case of B and C amounts to two third of the length, or if required, fitting manila rope blocks No. 11 - 1152 and pulleys No. 443.
All dimensions in mm.

Loading capacity in kg	150	250	1000	1500	2000	3000
Size of thread	M 10	M 12	M 20	M 24	M 24	M 30
c	15	16	26	29	33	42
h	23	25	35	43	48	53
i 1	11	18	26	30	33	36
i 2	10	12	20	24	24	30
j	35	38	58	64	72	80
l	120	126	184	203	224	250
m	20	19	32	33	37	40
n	22	25	36	40	42	46
Weight in kg about	0,24	0,40	1,20	1,75	2,45	3,20

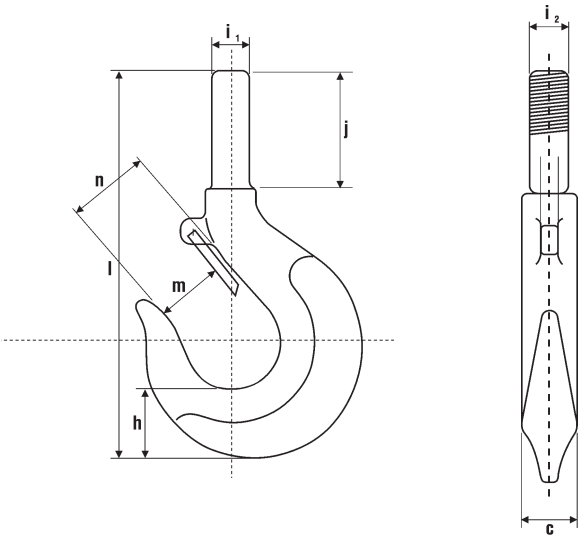

Galvanized swivel hooks

with safety catch

No. 512 Galvanized swivel hooks with safety catch

with lifting hooks No. 535 b acc. to DIN 15401 and swivel similar to DIN 82018.
All dimensions in mm.

Loading capacity in kg	125	250	500	1000	2000	3000	5000	10000
Size of thread	M 10	M 12	M 16	M 20	M 24	M 30	M 36	M 45
c	11	15	19	22	29	38	45	60
d	22	30	39	45	65	78	105	133
e	20	25	33	36	44	54	70	96
h	14	19	24	31	37	48	58	75
l	149	177	224	265	305	379	460	595
m	17	21	25	30	33	41	45	59
p	127	148	185	215	255	305	370	475
s	8	10	15	19	20	26	32	45
Weight in kg about	0,22	0,47	0,98	1,72	3,24	5,41	9,10	21,50

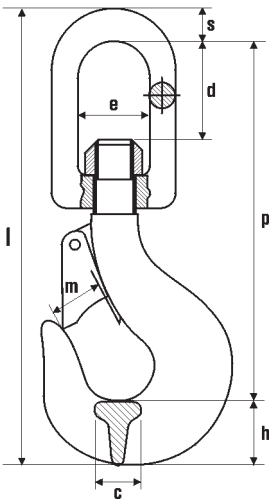

No. 531 Cargo hooks

acc. to DIN 82017 to be connected with shackles, made of material S355J2G3.
All dimensions in mm.

Nominal size	1	2	3	5
b	40	58	72	92
c	28	36	46	56
f	17,5	24	30	39
g	19	27	35	44
h	42	54	68	84
l	192	251	310	387
n	25	32	40	50
o	117	150	188	234
v	134	170	214	268
Proper shackles DIN 82101	B 1	B 2	B 3	B 5
Loading capacity in kg	1000	2000	3200	5000
Weight in kg about	3,00	7,00	11,00	20,00

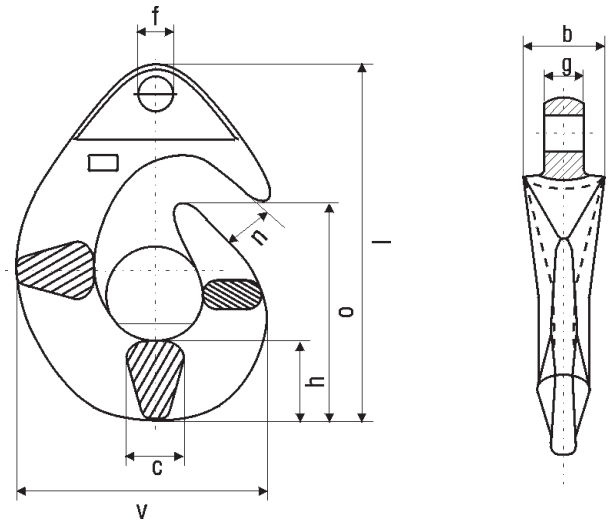

Cargo hook swivels

No. 532 Cargo hooks swivels

acc. to DIN 82018 made of material S235.
All dimensions in mm.

Nominal size	1	2	3	5	8	10
a	48	58	72	94	115	125
b	21	26	32	40	49	54
d	51	62	78	101	123	133
e	32	45	55	70	87	96
h1	14	18	23	28	35	39
h2	16	20	26	32	40	45
k	35	50	60	75	95	105
l	190	233	291	370	454	499
p	160	195	242	310	379	415
s	12	16	21	26	32	36
Loading capacity in kg	1000	2000	3150	5000	8000	10000
Weight in kg about	0,60	1,30	2,60	5,20	9,90	13,60

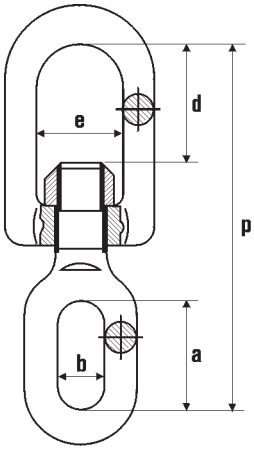

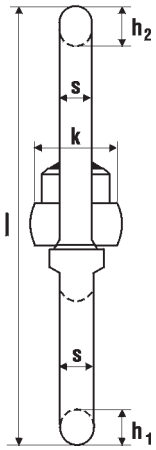

No. 534 Oval eyes

acc. to DIN 82006 Type B (up to nominal size 1 acc. to HNA Lg 6) made of material S235 / S355, fitting our manila and wire rope blocks.
All dimensions in mm.

Please specify in order:

A = not machined

B = with thread and nut

Nominal size	0,16	0,25	0,5	1	2	3	4	5	6
Loading capacity in kg	160	250	500	1000	2000	3150	4000	5000	6300
Size of thread	M 10	M 12	M 16	M 20	M 24	M 30	M 33	M 36	M 42
a	35	48	50	60	58	72	94	94	108
b	19	28	29	34	26	32	40	40	45
i	14	16	20	20	28	34	40	40	47
j	35	46	52	75	47	57	73	73	82
l	91	124	142	180	156	194	243	243	278
s	9	12	14	16	16	21	26	26	29
t	10	13	15,5	20	18	23	28	28	32
w	15	25	30	32	29	36	42	42	50
y	56	78	86	105	91	114	142	142	164
Weight in kg about	0,10	0,24	0,25	0,72	0,67	1,33	2,37	2,37	3,90

Nominal size	8	10	12	16	20	25	32	40	50
Loading capacity in kg	8000	10000	12500	16000	20000	25000	31500	40000	50000
Size of thread	M 45	M 52	M 56	M 64	M 72	M 76	M 80	M 90	M 100
a	115	125	144	163	173	192	216	240	264
b	49	54	60	66	72	80	90	100	110
i	50	57	61	69	77	86	90	102	112
j	90	100	110	123	133	*	*	*	*
l	299	331	372	419	454	496	-	-	-
s	32	36	41	46	51	56	60	66	74
t	35	39	44	49	54	59	64	70	78
w	53	60	64	72	82	86	90	102	112
y	174	192	218	247	267	294	296	328	362
Weight in kg about	4,70	6,80	9,35	13,00	21,00	26,00	36,00	48,00	64,00

* Please specify the length in your order.

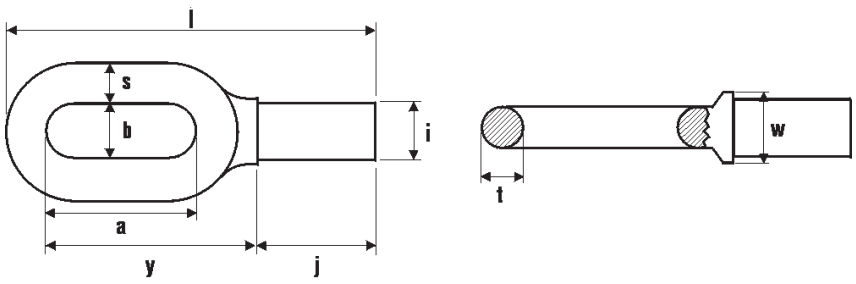

No. 535 Shank hooks

acc. to DIN 15401 RSN (with cams) made of material StE 355 (non-ageing steel), property class P.
Length of thread in case of B and C amounts to two thirds of the shank length; other dimensions on request. If required also with safety catch. Fitting wire rope blocks No. 31 - 362 and swivel hooks No. 512.
Attention! In case of crane bottom hook blocks, hook tackles or similar, further inquiry is necessary due to different requirements regarding the shaft and nut design.
All dimensions in mm.

Please specify in order:

A = not machined

B = with metric screw-thread acc. to GL-regulation and nut

C = with metric screw-thread acc. to GL-regulation, nut and safety catch

Nominal size	006	012	025	04	05	08	1	1,6	2,5
Loading capacity kg class* 1 Bm	160	320	630	1000	1250	2000	2500	4000	6300
Loading capacity kg class* 1 Am	125	250	500	800	1000	1600	2000	3200	5000
Loading capacity kg class* 2 m	100	200	400	630	800	1250	1600	2500	4000
Loading capacity kg class* 3 m	-	160	320	500	630	1000	1250	2000	3200
Loading capacity kg class* 4 m	-	125	250	400	500	800	1000	1600	2500
Loading capacity kg class* 5 m	-	100	200	320	400	630	800	1250	2000
Size of thread	M 10	M 12	M 16	M 20	M 20	M 24	M 24	M 30	M 36
c	11	15	19	22	24	29	32	38	45
h	14	19	24	29	31	37	40	48	58
i	14	16	20	24	24	30	30	36	42
j	30	30	50	50	60	60	60	80	80
l	114	134	168	184	198	223	237	272	311
m	17	21	25	28	30	33	36	41	45
n	20	24	28	32	34	38	40	45	50
r	27	34	42	49	53	61	65	76	90
y	52	63	74	83	89	100	105	118	132
z	100	115	144	155	167	186	197	224	253
Weight in kg about	0,20	0,32	0,80	1,00	1,15	1,90	2,50	3,85	6,50

Nominal size	4	5	6	8	10	12	16	20	25
Loading capacity kg class* 1 Bm	10000	12500	16000	20000	25000	32000	40000	50000	63000
Loading capacity kg class* 1 Am	8000	10000	12500	16000	20000	25000	32000	40000	50000
Loading capacity kg class* 2 m	6300	8000	10000	12500	16000	20000	25000	32000	40000
Loading capacity kg class* 3 m	5000	6300	8000	10000	12500	16000	20000	25000	32000
Loading capacity kg class* 4 m	4000	5000	6300	8000	10000	12500	16000	20000	25000
Loading capacity kg class* 5 m	3200	4000	5000	6300	8000	10000	12500	16000	20000
Size of thread	M 42	M 45	M 52	M 56	M 64	M 72	M 80	M 90	M 100
c	53	60	67	75	85	95	106	118	132
h	67	75	85	95	106	118	132	150	170
i	48	53	60	67	75	85	95	106	118
j	100	110	140	150	166	194	225	248	269
l	352	393	459	513	558	628	714	803	894
m	52	59	67	69	76	84	97	110	132
n	56	63	71	80	90	100	112	125	140
r	103	114	131	146	163	182	204	232	262
y	148	165	185	210	221	252	280	330	360
z	285	318	374	418	452	510	582	653	724
Weight in kg about	10,00	13,50	20,00	24,00	34,00	47,00	66,00	95,00	136,00

*depending on classification

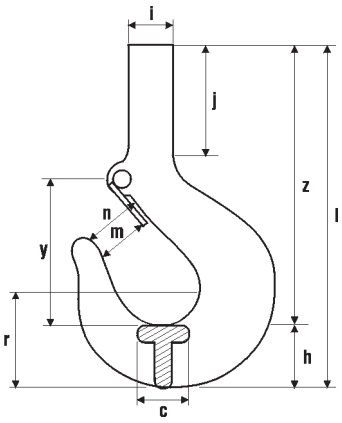

No. 541 Safety eye hooks

acc. to DIN 7541 grade 5, drop-forged, with safety catch, made of material 21 MnSi 5, green coated.
All dimensions in mm.

Hook-No.	17	20	21	22	23	24
Loading capacity in kg	500	1000	1250	1600	2000	2500
c	13	19	21	24	26	30
f	18	25	18	31,5	35,5	40
g	36	50	56	63,5	71,5	80
h	17	24	26	30	34	38
l	97	136	152	171	192	218
m	18	25	28	31,5	35,5	40
n	22,4	31,5	35,5	40	45	50
p	71	100	112	125	140	160
t	9	12,5	14	16	18	20
Weight in kg about	0,16	0,45	0,60	0,90	1,20	1,80

Hook-No.	25	26	27
Loading capacity in kg	3200	4000	5000
c	34	38	42
f	45	50	56
g	90	100	112
h	42	48	53
l	244	273	305
m	45	50	56
n	56	63	71
p	180	200	224
t	22,4	25	28
Weight in kg about	2,50	3,50	5,00

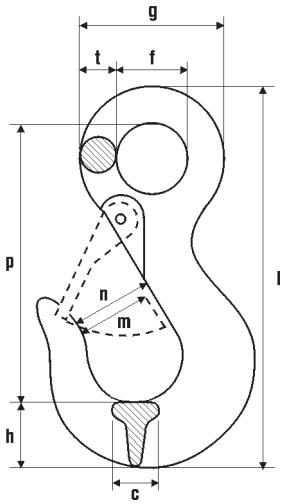

No. 546 Tow-hooks with becket

made of material C 45, drop-forged, with spring retention, galvanized, with safety factor 4.
All dimensions in mm.

Loading capacity in kg	875
c	13
f	16
g	35
h	17
l	90
m	18
p	65
Weight in kg about	0,12

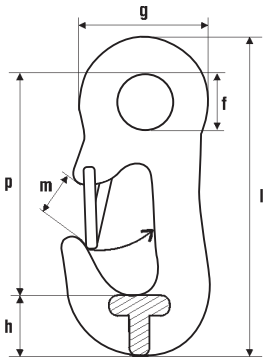

No. 547 Eye hooks

grade 8, galvanized safety catch, drop-forged, made of material 1.6541, green coated.
All dimensions in mm.

Nominal size	4 - 5	5 - 8	6 - 8	7 - 8	8 - 8	9 - 8
Loading capacity in kg	500	800	1120	1500	2000	2700
c	20	21	24	25	28	29
f	25	26	27	28	32	34
g	45	46	53	56	60	66
h	27	28	29	31	32	37
l	130	133	147	160	169	190
m	20	22	24	28	29	34
p	93	95	105	115	123	137
s	10	10	13	14	14	16
Weight in kg about	0,40	0,60	0,80	0,90	1,10	1,50

Nominal size	10 - 8	11 - 8	13 - 8	14 - 8	16 - 8	18 - 8
Loading capacity in kg	3150	4000	5300	6300	8000	10000
c	30	34	38	39	39	45
f	34	40	50	52	54	60
g	68	80	96	100	106	128
h	40	43	44	51	57	61
l	195	227	255	288	299	329
m	34	40	45	50	57	61
p	138	164	188	213	216	234
s	17	20	23	24	26	34
Weight in kg about	1,60	2,50	3,70	4,80	5,00	8,00

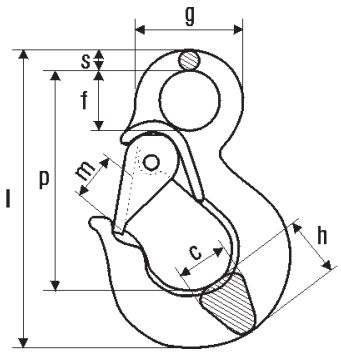

Snap hooks

made of stainless steel

No. 1360 Snap hooks made of stainless steel

made of material A4, high gloss polished, **similar to DIN 5299 C**.
All dimensions in mm.

l x s	50 x 5	60 x 6	70 x 7	80 x 8	90 x 9	100 x 10	120 x 11	140 x 12	160 x 13
e	4	6	8	8	9	10	11	14	16
f	8	9	10	12	12	15	18	20	22
m	7	8	8	10	10	11	16	19	23
Loading capacity in kg	120	120	180	230	250	350	450	510	600
Weight in kg about	0,02	0,03	0,04	0,07	0,09	0,13	0,19	0,26	0,35

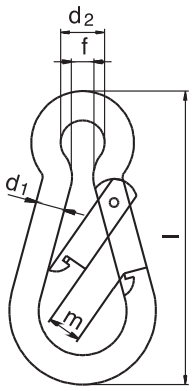

No. 1362 Snap hooks made of stainless steel

made of material A4, high gloss polished, with pressed-in thimble.
All dimensions in mm.

l x s	50 x 5	60 x 6	70 x 7	80 x 8	90 x 9	100 x 11	120 x 11	140 x 12	160 x 13
f	6	7	9	9	11	15	15	17	20
m	7	8	8	9	10	11	16	19	25
Loading capacity in kg	100	120	180	230	250	350	450	510	600
Weight in kg about	0,02	0,03	0,04	0,07	0,09	0,13	0,18	0,26	0,35

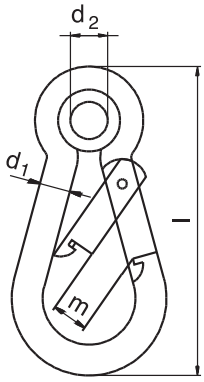

No. 1364 Snap hooks made of stainless steel

made of material A4, high gloss polished, with pressed-in thimble and safety nut.
All dimensions in mm.

l x s	60 x 6	80 x 8	100 x 10	120 x 13
f	8	12	15	18
m	7	9	11	16
Loading capacity in kg	120	230	350	450
Weight in kg about	0,03	0,07	0,14	0,22

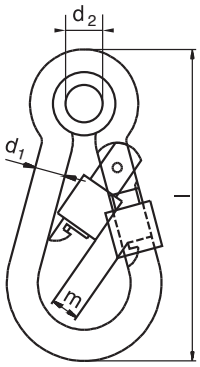

Safety tackle blocks

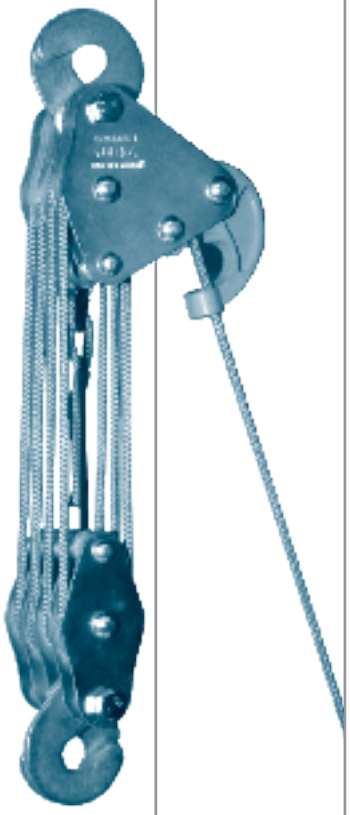

Product								Page
Tackle block No. 409 with fastening device								**11.02**
Tackle block No. 410								**11.03**
Tackle block No. 420 with 3 sheaves								**11.04**

Safety tackle blocks

11

No. 409 Safety tackle block with fastening device

with safety factor 4. Double gripping safety hooks, all parts made of steel, bright galvanized, pulleys and fastening device made of high-quality polyamide, very low own weight, excellent capacity and safety, very smooth operation, suitable for all kinds of application. With 25 m plastics rope of 6 mm diameter, twist-free, hoisting height about 3 m. All dimensions in mm.

Pulley outside diameter Groove base diameter	**40** 34
Axial length	62
Length of tackle block min.	260
Width of side sheet	70
Hook opening width	15
High of hook ground	18
Loading capacity in kg	400
Weight in kg about	1,30

To fasten the rope: pull the lever of fastening device with the rope downwards (in vertical direction), then release the rope. The load will be kept immediately. **To release the rope:** pull the load slightly, pull the rope in outward direction, the rope will then be released.

No. 410 Safety tackle block

with safety factor 4 Double gripping safety hooks, all parts made of steel, bright galvanized, pulleys made of high-quality polyamide, very low own weight, excellent capacity and safety, very smooth operation, suitable for all kinds of application. With 20 m plastics rope of 6 mm diameter, twist-free, hoisting height about 3 m.
All dimensions in mm.

Pulley outside diameter Groove base diameter	**40** 34
Axial length	48
Length of tackle block min.	260
Width of side sheet	55
Hook opening width	15
Loading capacity in kg	300
Weight in kg about	1,10

Please specify in order:

ER = with steel or cast iron pulleys (40 - 100 mm Ø)

MR = with brass pulleys (30 - 100 mm Ø)

PR = with polyamide pulleys (40 + 60 mm Ø)

No. 420 Tackle blocks (upper and lower block)

with forged swivel lifting hook with safety catch, galvanized, with three pulleys. Delivery without rope.
All dimensions in mm.

Pulley outside diameter Groove base diameter	**30** 25	**40** 33	**50** 43	**60** 53	**70** 62	**80** 71	**100** 88
Axial length	41	42	50	50	67	67	86
Length of tackle block min.	320	360	390	390	590	590	790
Width of side sheet	42	42	62	62	87	87	117
Hook opening width	15	15	15	15	21	21	25
Rope diameter max.	6	6	8	10	12	12	16
Loading capacity in kg	150	150	200	250	300	350	500
Weight in kg about	0,85	0,85	1,50	1,65	3,20	3,30	8,50

CAH

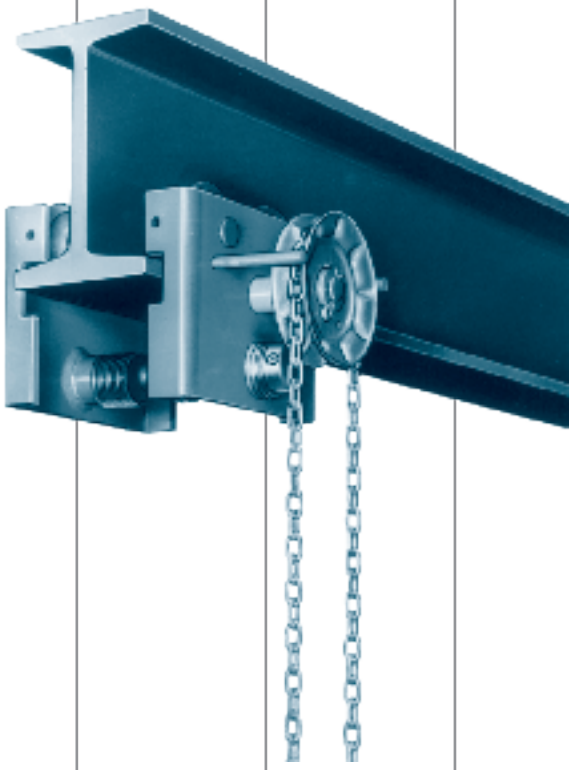

Manually operated

chain wheels and trolleys

Product								Page
Trolley No. 703								**12.02**
Trolley No. 704								**12.02**
Hand chain wheel No. 711								**12.03**
Hand chain wheel No. 712								**12.04**
Cain No. 839								**12.05**

Manually operated trolleys and chain wheels

No. 703 and No. 704 Trolleys

with trolley wheels No. 1203 with maintenance-free ball bearings, galvanized load bolts 1 N, adjusting screws and fastening nuts. With integrated derailment and collision protection, designed acc. to DIN 15018. Wheel treads facilitate the usage on all standard profiles. If required also with load bolt 2 V for larger flange widths. Suitable for manual, electric and compressed-air lifting appliances. In compliance with the German regulations for prevention to accidents: cranes (VBG 9).
No. 703 monorail push travel trolley.
No. 704 monorail hand geared trolley.
All dimensions in mm.

No. 703

Loading capacity in kg Loading capacity incl. hoist in kg	**500** 600	**1000** 1100	**1500** 1620	**2000** 2120	**2500** 2630
Flange width with load bolt 1 N	50 - 146	50 - 179	50 - 173	50 - 173	66 - 186
Flange width with load bolt 2 V	147 - 302	180 - 310	174 - 316	174 - 316	187 - 310
Travel distance at 30 m hand chain path	7,8	10	10	10	6,5
Hand chain pull in daN	6,5	10	15	20	12
Weight **No. 703** with load bolt 1 N in kg about	4,10	6,80	7,80	7,80	16,60
with load bolt 2 V in kg about	4,50	8,50	9,90	9,90	19,90
Weight **No. 704** without hand chain					
with load bolt 1 N in kg about	5,40	8,10	9,20	10,90	18,60
with load bolt 2 V in kg about	5,80	9,80	10,30	12,80	21,30

No. 704

Loading capacity in kg Loading capacity incl. hoist in kg	**3200** 3350	**5000** 5200	**6300** 6400	**7500** 7750	**10000** 10300
Flange width with load bolt 1 N	66 - 186	74 - 182	74 - 164	119 - 189	119 - 160
Flange width with load bolt 2 V	187 - 310	183 - 310	165 - 310	190 - 310	161 - 310
Travel distance at 30 m hand chain path	6,5	6,3	6,3	6,4	3,2
Hand chain pull in daN	16	17	21	21	14
Weight **No. 703** with load bolt 1 N in kg about	16,60	31,50	31,50	69,00	88,00
with load bolt 2 V in kg about	19,90	39,40	39,40	71,00	91,00
Weight **No. 704** without hand chain					
with load bolt 1 N in kg about	18,60	36,00	36,00	71,00	92,00
with load bolt 2 V in kg about	21,30	40,50	40,50	73,00	95,00

No. 711 Hand chain wheels made of cast iron

not machined, without hub bore (without a = 530 mm, here ist he pilot hole 25 mm), for hand chain No. 839 acc. to DIN 766, chain link size 5 x 18,5 mm pitch, fitting geared trolleys No. 704. If required also with other dimensions. Against surcharge also hub bore.
All dimensions in mm.

a b	**160** 130	**200** 165	**250** 212	**380** 330	**435** 400	**530** 503
e	33	33	33	36	37	38
f	40	40	45	55	60	90
g	36	36	36	38	42	80
Number of teeth	11	14	18	28	34	43
Weight in kg about	2,00	2,50	3,80	8,50	10,10	18,00

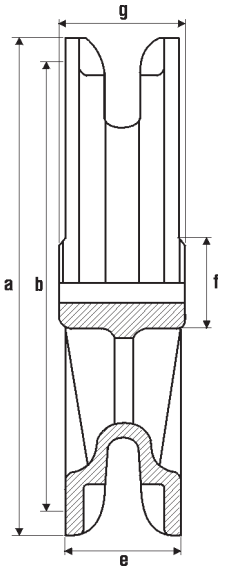

Hand chain wheels

made of cast iron

No. 712 Hand chain wheels made of cast iron

not machined, without hub bore (without a = 450 - 620 mm, here is the pilot hole 25 mm), for hand chain No. 839 acc. to DIN 766, chain link size 5 x 18,5 mm pitch, fitting geared trolleys No. 704. If required also with other dimensions. Against surcharge also with hub bore.
All dimensions in mm.

a b	**95** 71	**110** 82	**120** 94	**135** 118	**165** 141	**185** 165	**200** 177
e	32	32	32	32	32	32	32
f	50	60	50	60	60	65	65
g	50	50	50	50	50	50	50
Pilot hole	-	-	-	-	-	-	-
Number of teeth	6	7	8	10	12	14	15
Weight in kg about	1,20	1,90	2,00	2,40	3,20	4,30	3,20

a b	**235** 212	**250** 224	**260** 236	**300** 283	**335** 306	**380** 353	**435** 400
e	32	32	32	32	32	34	34
f	60	60	60	60	70	70	70
g	50	55	50	50	60	60	60
Pilot hole	-	-	-	-	-	-	-
Number of teeth	18	19	20	24	26	30	34
Weight in kg about	5,00	5,00	5,00	5,50	7,50	9,00	10,00

a b	**450** 424	**530** 503	**570** 530	**620** 589
e	34	38	38	38
f	90	90	90	100
g	90	80	75	70
Pilot hole	25	25	25	25
Number of teeth	36	43	45	50
Weight in kg about	12,00	18,00	19,00	25,00

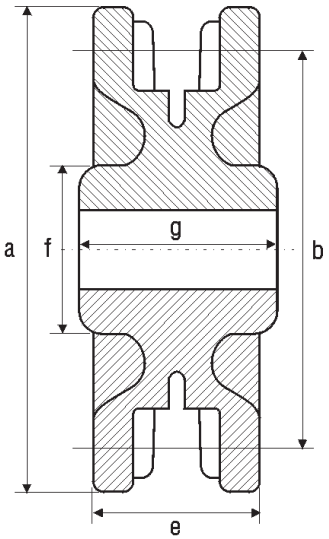

No. 839 Galvanized hand chain

acc. to DIN 766, link size 5 x 18,5 mm pitch, fitting hand chain wheels No. 711 and No. 712.
All dimensions in mm.
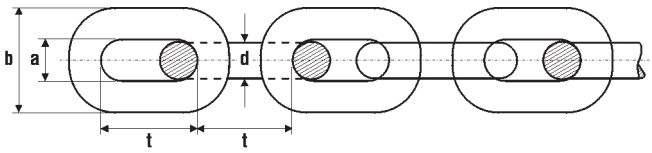
a	6
b	16,9
d	5
t	18,5
Weight in kg per meter	0,50